# Operating manual

## Booster

## DN C SIGMA CONTROL 2

No.: 901768 27 USE

Read this manual before using this product.

Failure to follow the instructions and safety precautions in this manual can result in serious injury or death.

Manufacturer:

KAESER KOMPRESSOREN SE

96410 Coburg • PO Box 2143 • GERMANY • Tel. +49-(0)9561-6400 • Fax +49-(0)9561-640130

www.kaeser.com

Original instructions
/KKW/PDNC 2.07 en Z1 SBA-NV-AGGREGAT
/KKW/SSC 2.11 Z1
20210325 115810

# Contents


1 Regarding this Document
1.1 Using this document ... 1
1.2 Further documents ... 1
1.3 Copyright ... 1
1.4 Symbols and labels ... 1
1.4.1 Warnings ... 1
1.4.2 Potential damage warnings ... 2
1.4.3 Other alerts and their symbols ... 2

2 Technical Data
2.1 Nameplate ... 4
2.2 Compressor block type ... 4
2.3 Options ... 5
2.4 Weight ... 5
2.5 Temperature ... 5
2.6 Ambient conditions ... 6
2.7 Ventilation ... 6
2.8 Pressure ... 6
2.9 Calculating the volumetric flow rate ... 7
2.10 Example for determining the permissible initial pressure ... 10
2.11 Calculating the configurable switching differential SD ... 10
2.12 Noise emission [dB(A)] ... 12
2.13 Motors and power ... 12
2.13.1 Compressor motor ... 12
2.13.2 Fan motor ... 12
2.14 Compressor oil recommendation ... 13
2.14.1 Compressor oil charge quantity ... 13
2.15 Power supply ... 13
2.15.1 Power supply specifications ... 14
2.16 Water-cooling ... 16
2.17 Water-cooling (shell and tube heat exchanger) ... 16
2.17.1 Component specifications ... 17
2.17.2 Cooling water quality ... 17
2.17.3 Design data for the cooling system ... 18
2.18 Machine duty cycle ... 19

3 Safety and Responsibility
3.1 Basic instructions ... 20
3.2 Specified use ... 20
3.3 Improper use ... 20
3.4 User's responsibilities ... 20
3.4.1 Observe statutory and universally accepted regulations ... 20
3.4.2 Qualified personnel ... 21
3.4.3 Compliance with Inspection Schedules and Accident Prevention Regulations ... 21
3.5 Dangers ... 22
3.5.1 Safely dealing with sources of danger ... 22
3.5.2 Safe machine operation ... 25
3.5.3 Organizational Measures ... 27
3.5.4 Danger areas ... 27
3.6 Safety devices ... 27
3.7 Service life of safety functions ... 28
3.8 Safety signs ... 28
3.9 Information signs ... 31
3.10 Emergency situations ... 31
3.10.1 Correct fire fighting ... 31

3.10.2 Treating injuries from handling cooling oil ... 32
3.11 Warranty ... 32
3.12 Environmental protection ... 33

4 Design and Function
4.1 Enclosure ... 34
4.2 Machine function ... 34
4.2.1 Description ... 35
4.3 Safety devices ... 35
4.4 Operating panel SIGMA CONTROL 2 ... 36
4.5 Operating modes and control modes ... 38
4.5.1 Machine operating modes ... 38
4.5.2 Control modes ... 39
4.6 Oil level monitoring ... 41
4.7 Floating relay contacts ... 41
4.8 Options ... 41
4.8.1 KAESER FILTER KB ECO-DRAIN ... 41
4.8.2 Machine mountings ... 42
4.8.3 Oil collection tray ... 42
4.8.4 Electronic condensate drain ... 43
4.8.5 Water-cooling ... 43

5 Installation and Operating Conditions
5.1 Ensuring safety ... 45
5.2 Installation conditions ... 45
5.2.1 Determining location and clearances ... 45
5.2.2 Ensuring adequate machine room ventilation ... 46
5.2.3 Exhaust air ducting design ... 47
5.3 Using the machine in a compressed air system ... 47

6 Installation
6.1 Ensuring safety ... 48
6.2 Reporting transport damage ... 49
6.3 Connecting the machine to the compressed air network ... 49
6.3.1 Connecting the machine to the low-pressure network ... 49
6.3.2 Connecting the machine to the high-pressure network ... 50
6.4 Installation example ... 52
6.5 Connecting the condensate drain ... 53
6.6 Connecting the machine to a power supply network ... 55
6.7 Options ... 56
6.7.1 Anchoring the Machine ... 56
6.7.2 Oil collection tray ... 56
6.7.3 Connecting the cooling water ... 57

7 Initial Start-up
7.1 Ensuring safety ... 59
7.2 Instructions to be observed before commissioning ... 59
7.3 Checking installation and operating conditions ... 60
7.4 Setting the overload protection relay ... 61
7.5 Checking the motor protection switch settings ... 61
7.6 Starting the machine for the first time ... 61
7.7 Setting the set point pressure ... 62
7.8 Checking the door interlock switch ... 62
7.9 Setting the display language ... 63

8 Operation
8.1 Switching on and off ... 65

8.1.1 Switching on ... 65
8.1.2 Switching off ... 65
8.2 Switching off in an emergency and switching on again ... 66
8.3 Using the remote control for switching on and off ... 66
8.4 Switching on and off with the clock ... 67
8.5 Interpreting operation messages ... 68
8.6 Acknowledging alarm and warning messages ... 68

9 Fault Recognition and Rectification
9.1 Basic instructions ... 70
9.2 Other faults ... 70
9.3 Electronic condensate drain alarm function ... 71

10 Maintenance
10.1 Ensuring safety ... 73
10.2 Following the maintenance plan ... 74
10.2.1 Logging maintenance work ... 74
10.2.2 Resetting maintenance interval counters ... 74
10.2.3 Regular maintenance and service work ... 74
10.3 Control cabinet: Clean or renew the filter mat ... 78
10.4 Air filter maintenance ... 79
10.5 Cooler maintenance ... 80
10.6 Replacing the cooler ... 81
10.7 Water-cooling Maintenance ... 81
10.8 Motor maintenance ... 81
10.9 Testing the safety relief valve ... 82
10.10 Checking the overheating safety shutdown function ... 83
10.11 Checking the EMERGENCY STOP push button ... 83
10.12 Cooler compressed air inlet temperature switch ... 84
10.13 Venting the machine (depressurizing) ... 85
10.14 Checking the oil level ... 88
10.15 Topping off the compressor oil ... 88
10.16 Changing the compressor oil ... 89
10.17 Changing the micro-filter element in the crankcase vent ... 91
10.18 Changing the crankcase oil filter ... 92
10.19 Dirt trap maintenance ... 94
10.19.1 Dirt trap in the inlet line ... 94
10.19.2 Dirt trap in the crankcase ... 95
10.19.3 Dirt trap in the filter ... 96
10.20 Check valve maintenance ... 97
10.20.1 Idle mode check valve ... 97
10.21 Replacing the condensate drain solenoid valve ... 98
10.22 Electronic condensate drain ... 99
10.22.1 Condensate drain check ... 99
10.22.2 Replace the service unit ... 100
10.23 Replacing the filter element ... 101
10.23.1 Removing the filter element ... 102
10.23.2 Installing the filter element ... 103
10.23.3 Installing the filter housing ... 104
10.23.4 Pressurizing the compressed air filter ... 105
10.24 Electronic condensate drain ... 105
10.24.1 Checking the condensate drain ... 105
10.24.2 Condensate drain maintenance ... 106
10.25 Drive belt maintenance ... 106
10.26 Cylinder head and valves ... 107

10.27 Documenting maintenance and service work ..... 108

11 Spares, Operating Materials, Service
11.1 Note the nameplate ..... 109
11.2 Ordering consumable parts and operating fluids/materials ..... 109
11.3 KAESER AIR SERVICE ..... 109
11.4 Spare parts for service and repair ..... 110
11.4.1 Spare parts option K1 (air cooling) ..... 110
11.4.2 Spare parts option K9 (water cooling: tube heat exchanger) ..... 127

12 Decommissioning, Storage and Transport
12.1 Decommissioning ..... 144
12.2 Packing ..... 144
12.3 Storage ..... 144
12.4 Transport ..... 145
12.4.1 Safety ..... 145
12.4.2 Transport with a forklift truck ..... 145
12.4.3 Transport with a hoist ..... 145
12.5 Disposal ..... 147
12.5.1 Battery disposal ..... 147

13 Annex
13.1 Pipeline and instrument flow diagram (P+I diagram) ..... 148
13.2 Dimensional drawing ..... 151
13.3 Electrical Diagram ..... 156
13.4 Determining the permissible initial pressure ..... 189
13.5 Safety relief valve data sheet ..... 197
13.5.1 Data Sheet 1 of 4 ..... 197
13.5.2 Data Sheet 2 of 4 ..... 200
13.5.3 Data Sheet 3 of 4 ..... 203
13.5.4 Data Sheet 4 of 4 ..... 209
13.6 Condensate drain – operating instructions ..... 215

# List of Illustrations


Fig. 1 Initial pressure diagram ..... 10
Fig. 2 Three-phase star (wye); 4 wire; center point solidly grounded ..... 14
Fig. 3 Three-phase star (wye); 3 wire; center point solidly grounded ..... 14
Fig. 4 Location of safety signs ..... 29
Fig. 5 Enclosure overview ..... 34
Fig. 6 Machine overview ..... 35
Fig. 7 Keys – overview ..... 36
Fig. 8 Indicators – overview ..... 37
Fig. 9 RFID sensor field ..... 38
Fig. 10 Oil level monitoring ..... 41
Fig. 11 Option F14 KAESER FILTER KB ECO-DRAIN ..... 42
Fig. 12 Machine mountings ..... 42
Fig. 13 Oil collection tray ..... 42
Fig. 14 Option K6: Electronic condensate drain ..... 43
Fig. 15 Water cooling (Option K9) ..... 44
Fig. 16 Recommended installation, distances [in] ..... 46
Fig. 17 Low-pressure network connection ..... 49
Fig. 18 High-pressure network connection ..... 50
Fig. 19 Piping example with Option K6 ..... 51
Fig. 20 Piping example without Option K6 ..... 52
Fig. 21 Installation example (suggestion) ..... 53
Fig. 22 Connecting the condensate drain ..... 55
Fig. 23 Machine mountings ..... 56
Fig. 24 Oil collection tray ..... 57
Fig. 25 Connecting the cooling water ..... 58
Fig. 26 Position of the door interlock switch ..... 63
Fig. 27 Switching on and off ..... 65
Fig. 28 Switching off in an emergency ..... 66
Fig. 29 Using the remote control for switching on and off ..... 67
Fig. 30 Switching on and off with the clock ..... 67
Fig. 31 Acknowledging messages ..... 69
Fig. 32 Switching cabinet ventilation ..... 78
Fig. 33 Air filter maintenance ..... 79
Fig. 34 Cleaning the cooler ..... 80
Fig. 35 Motor maintenance ..... 82
Fig. 36 Checking the EMERGENCY STOP push button ..... 83
Fig. 37 Compressed air inlet temperature switch ..... 84
Fig. 38 Unlocking the temperature switch ..... 85
Fig. 39 Mount the user's shut-off valves. ..... 86
Fig. 40 Venting the cooler. ..... 87
Fig. 41 Venting the inlet pressure side ..... 87
Fig. 42 Checking the oil level ..... 88
Fig. 43 Topping off the compressor oil ..... 89
Fig. 44 Changing the compressor oil ..... 90
Fig. 45 Changing the micro-filter element in the crankcase vent ..... 92
Fig. 46 Changing the crankcase oil filter ..... 93
Fig. 47 Dirt trap in the inlet line ..... 94
Fig. 48 Dirt trap in the crankcase ..... 95
Fig. 49 Dirt trap in the filter ..... 96
Fig. 50 Idle mode check valve ..... 97
Fig. 51 Replacing the condensate drain solenoid valve ..... 98
Fig. 52 Option K5/K6: Condensate drain check ..... 99
Fig. 53 Replacing the service unit ..... 100
Fig. 54 Removing the filter element ..... 102

# List of Illustrations

Fig. 55 Installing the filter element ..... 103
Fig. 56 Installing the filter housing ..... 104
Fig. 57 Filling out the maintenance sticker ..... 104
Fig. 58 Checking the condensate drain ..... 105
Fig. 59 Visual check for damage ..... 106
Fig. 60 Re-tighten the drive belt ..... 107
Fig. 61 Transporting with a forklift truck ..... 145
Fig. 62 Transport with a crane ..... 146
Fig. 63 Battery disposal ..... 147

# List of Tables


Tab. 1 Danger levels and their definition (personal injury) ... 1
Tab. 2 Danger levels and their definition (damage to property) ... 2
Tab. 3 Nameplate ... 4
Tab. 4 Compressor block type ... 4
Tab. 5 Options ... 5
Tab. 6 Weight ... 5
Tab. 7 Temperature ... 5
Tab. 8 Ambient conditions ... 6
Tab. 9 Ventilation ... 6
Tab. 10 Safety relief valve opening pressure ... 6
Tab. 11 Compressor block rated speed ... 7
Tab. 12 Flow rate parameters ... 8
Tab. 13 Example 1 ... 10
Tab. 14 Example 2 ... 11
Tab. 15 Noise emission [dB(A)] ... 12
Tab. 16 Compressor motor (60Hz) ... 12
Tab. 17 Fan motor (60Hz) ... 12
Tab. 18 Compressor oil recommendation ... 13
Tab. 19 Compressor oil charge quantity ... 13
Tab. 20 Supply 208V / 3ph / 60Hz ... 14
Tab. 21 Supply 230V / 3ph / 60Hz ... 14
Tab. 22 Supply 380V / 3ph / 60Hz ... 15
Tab. 23 Supply 460V / 3ph / 60Hz ... 15
Tab. 24 Supply 575V / 3ph / 60Hz ... 15
Tab. 25 Water cooling K9: Individual design data ... 17
Tab. 26 Component specifications (Option K9) ... 17
Tab. 27 Cooling water quality (shell and tube heat exchanger) ... 17
Tab. 28 Cooling water temperature (ΔT=18° F) ... 18
Tab. 29 Inspection intervals according to Ordinance on Industrial Health and Safety ... 22
Tab. 30 Danger areas ... 27
Tab. 31 Category and Performance Level ... 28
Tab. 32 Safety signs ... 29
Tab. 33 Information signs ... 31
Tab. 34 Keys ... 36
Tab. 35 Indicators ... 37
Tab. 36 RFID sensor field ... 38
Tab. 37 Energy-efficient control modes ... 40
Tab. 38 Option K6: Electronic condensate drain operating states ... 43
Tab. 39 Condensate line ... 54
Tab. 40 Condensate collection line ... 54
Tab. 41 Condensate collecting line: Line cross-section ... 54
Tab. 42 Re-commissioning after storage/standstill ... 60
Tab. 43 Checklist for installation conditions ... 60
Tab. 44 Machine identification ... 67
Tab. 45 Remote control identification ... 67
Tab. 46 Machine identification ... 68
Tab. 47 Other faults and remedies ... 70
Tab. 48 Condensate drain alarm message ... 72
Tab. 49 Warn others that the machine is being serviced. ... 73
Tab. 50 Maintenance intervals, regular maintenance and service work ... 75
Tab. 51 Regular machine maintenance and service schedule ... 75
Tab. 52 Compressor oil: Change intervals ... 78
Tab. 53 Logged maintenance tasks ... 108
Tab. 54 Machine maintenance parts ... 109

# 1 Regarding this Document

## 1.1 Using this document

The operating manual is a component of the product. It describes the machine as it was at the time of first delivery after manufacture.

- ➤ Keep the operating manual in a safe place throughout the life of the machine.
- ➤ Supply any successive owner or user with this operating manual.
- ➤ Please insert any amendment or revision of the operating manual sent to you.
- ➤ Enter details from the machine nameplate and individual items of equipment in the table in chapter 2.

## 1.2 Further documents

Further documents included with this operating manual are:

- Certificate of acceptance / operating instructions for the pressure vessel.
- Operating manual for SIGMA CONTROL 2.

Missing documents can be requested from KAESER.

- ➤ Make sure all documents are complete and observe the instructions contained in them.
- ➤ Make sure you provide the data from the nameplate when ordering documents.

## 1.3 Copyright

This operator manual is copyright protected. Queries regarding use or duplication of the documentation should be referred to KAESER. Correct use of information will be fully supported.

## 1.4 Symbols and labels

- ➤ Please note the symbols and labels used in this document.

### 1.4.1 Warnings

Warning notices indicate dangers that may result in injury when disregarded.

Warning notices indicate three levels of danger identified by the corresponding signal word:

| Signal term | Meaning | Consequences of disregard |
|---|---|---|
| DANGER | Warns of an imminent danger | Will very likely result in death or severe injury |
| WARNING | Warns of a potentially imminent danger | May result in death or severe injury |
| CAUTION | Warns of a potentially dangerous situation | May result in a moderate physical injury |

Tab. 1 Danger levels and their definition (personal injury)

Warning notices preceding a chapter apply to the entire chapter, including all sub-sections.

Example:

**⚠ DANGER**

*The type and source of the imminent danger is shown here!*
*The possible consequences of ignoring a warning are shown here.*
*If you ignore the warning notice, the "DANGER" signal word indicates a lethal or severe injury will occur very likely.*

➤ *The measures required to protect yourself from danger are shown here.*

Warning notes referring to a sub-section or the subsequent action are integrated into the procedure and numbered as an action.

Example:

1. **⚠ WARNING** *The type and source of the imminent danger is shown here!*
   *The possible consequences of ignoring a warning are shown here.*
   *If you ignore the warning notice, the "WARNING" signal word indicates that a lethal or severe injury may occur.*
   ➤ *The measures required to protect yourself from danger are shown here.*
2. Always read and comply with warning instructions.

### 1.4.2 Potential damage warnings

Contrary to the warnings shown above, damage warnings do not indicate a potential personal injury.

Warning notices for damages are identified by their signal term.

| Signal term | Meaning | Consequences of disregard |
|---|---|---|
| NOTE | Warns of a potentially dangerous situation | Damage to property is possible |

Tab. 2 Danger levels and their definition (damage to property)

Example:

***NOTICE***

*The type and source of the imminent danger is shown here!*
*Potential effects when ignoring the warning are indicated here.*

➤ *The protective measures against the damages are shown here.*

➤ Carefully read and fully comply with warnings against damages.

### 1.4.3 Other alerts and their symbols

This symbol identifies particularly important information.

Material — Here you will find details on special tools, operating materials or spare parts.

Precondition — Here you will find conditional requirements necessary to carry out the task.
The conditions relevant to safety shown here will help you to avoid dangerous situations.

Option H1 — ➤ This symbol denotes lists of actions comprising one stage of a task.
Operating instructions with several steps are numbered in the sequence of the operating steps. Information relating to one option only are marked with an option code (e.g., H1 indicates that this section applies only to machines with machine mountings). Option codes used in this operator manual are explained in chapter 2.3.

Information referring to potential problems are identified by a question mark.
The cause is named in the help text ...
➤ ... as is a solution.

This symbol identifies important information or measures regarding the protection of the environment.

Further information — Further subjects are introduced here.

# 2 Technical Data

## 2.1 Nameplate

The machine's nameplate contains the model type and important technical information.

The nameplate is located on the outside of the machine:

- at the rear of the machine.

➢ Enter the data from the nameplate here as a reference:

| Feature | Value |
|---|---|
| booster | |
| Material No.: | |
| Serial No.: | |
| Ambient temperature* | |
| Compressed air inlet temp. TS* | |
| Rated power | |
| Inlet pressure* (ref. value: PS) | |
| Max. working pressure PS | |
| Rated motor speed | |
| Phases: | |
| Frequency: | |
| Voltage | |
| Full load current | |
| Full load current drive motor | |
| Electrical wiring diagram | |
| Option | |
| *Deviating values are given in the operating manual. | |

Tab. 3 Nameplate

Further information The *rated speed of the compressor block* and the *type of compressor block installed* can be found in the (Operating data/operands) menu in the SIGMA CONTROL 2 controller.

## 2.2 Compressor block type

| Type | DN 22 C | DN 30 C | | DN 37 C | | DN 37 CXL | DN 45 C |
|---|---|---|---|---|---|---|---|
| Compressor block | N 753 | N 753 | N 1100 | N 753 | N 1100 | N 2001 | N 1100 |

Tab. 4 Compressor block type

## 2.3 Options

The table contains a list of available options. The options for this machine are displayed on the nameplate.

➤ Enter the options here as a reference:

| Option | Option code | Available? |
|---|---|---|
| KAESER FILTER KB<br>with electronic condensate drain | F14 | |
| Adjustable machine feet | H1 | |
| Oil collection tray | H4 | |
| Air-cooling | K1 | |
| Electronic condensate drain<br>with floating contacts | K6 | |
| Water-cooling:<br>Shell and tube heat exchanger | K9 | |
| Available: ✓<br>Not Available: - | | |

Tab. 5 Options

## 2.4 Weight

The values shown are maximum values. The actual weight depends on equipment fitted.

| | DN 22 C | DN 30 C | DN 37 C / CXL | DN 45 C |
|---|---|---|---|---|
| Weight [lb.] | 3087 | 3307 | 3373 | 3395 |

Tab. 6 Weight

## 2.5 Temperature

| | DN 22 C-DN 45 C |
|---|---|
| Maximum<br>Air discharge temperature[1)] [°F] | ≤140 |
| Maximum<br>Block discharge temperature[1)] [°F] | ≤430 |
| [1)] Automatic shutdown | |

Tab. 7 Temperature

## 2.6 Ambient conditions

| | DN 22 C-DN 45 C |
|---|---|
| Maximum elevation AMSL [1] [ft.] | 3000 |
| Permissible ambient temperature [°F] | 37 – 115 |
| Permissible inlet temperature [°F] | 37 – 115 |

[1] Higher altitudes are permissible only after consultation with the manufacturer.

Tab. 8 Ambient conditions

## 2.7 Ventilation

The values given are minimum guide values that must be maintained.

| | DN 22 C | DN 30 C | DN 37 C / CXL | DN 45 C |
|---|---|---|---|---|
| Ventilation inlet air opening Ⓩ see Figure 16 [ft²] (Free cross-section) | 11.8 / 5.4[1] | 14.0 / 5.4[1] | 16.2 / 8.6[1] | 21.5 / 11.8[1] |
| Required volume of air for exhaust fan Ⓐ at static compression 0.01 psi [cfm] (machine in enclosed space without ducts) | 8240<br>8240[1] | 10594<br>8240[1] | 12950<br>8240[1] | 15892<br>8240[1] |
| Exhaust air (hot air) without duct [cfm] [2] | 8240<br>8240[1] | 8240<br>8240[1] | 8240<br>8240[1] | 8240<br>8240[1] |
| Permissible pressure drop for user's cooling air ducts [inches of water] | 1/4<br>1/4[1] | 1/4<br>1/4[1] | 1/4<br>1/4[1] | 1/4<br>1/4[1] |

[1] Option K9

[2] Basis for duct design

Tab. 9 Ventilation

## 2.8 Pressure

See nameplate for maximum working pressure

| Maximum working pressure [psig] | Safety relief valve activating pressure [psig] |
|---|---|
| **145** | 175 |
| **217** | 245 |
| **290** | 320 |
| **360** | 390 |

| Maximum working pressure [psig] | Safety relief valve activating pressure [psig] |
|---|---|
| 435 | 465 |
| 500 | 535 |
| 580 | 610 |
| 650 | 670 |

Tab. 10 Safety relief valve opening pressure

Further information See chapter 13.5 for safety relief valve data.

## 2.9 Calculating the volumetric flow rate

Compressor block rated speed

| Type | Rated speed 60Hz [rpm] |
|---|---|
| N 735 / N1100 | 790 |
| | 843 |
| | 895 |
| | 948 |
| | 1001 |
| | 1054 |
| | 1117 |
| | 1180 |
| | 1243 |
| | 1317 |
| | — |
| | — |
| N 2001 | 738 |
| | 790 |
| | 843 |
| | 895 |
| | 948 |
| | 1001 |
| | 1054 |
| | 1117 |
| | 1180 |
| | 1243 |
| | — |
| | — |

Tab. 11 Compressor block rated speed

Volumetric flow rate parameters

| | N 753 | N 1100 | N 2001 |
|---|---|---|---|
| KLa = Coefficient Flow rate: a | 0.603187 | 0.0134438 | 0.00914418 |
| KLb = Coefficient Flow rate: b | -0.0468106 | -0.0476777 | -0.0469224 |
| KLc = Coefficient Flow rate: c | 0.0253737 | 0.0670051 | 0.331378 |
| KLd = Coefficient Flow rate: d | -2.116820 | -0.9540620 | -0.00000388326 |
| KLe = Coefficient Flow rate: e | 0.00077485 | 0.00104363 | -0.0000362599 |
| KLf = Coefficient Flow rate: f | -0.00000001138 | 0.03055930 | 0.00171004 |
| KLg = Coefficient Flow rate: g | — | — | 0.000629749 |
| KLh = Coefficient Flow rate: h | — | — | -0.00500716 |
| KLi = Coefficient Flow rate: i | — | — | -0.000829702 |
| KLk = Coefficient Flow rate: k | — | — | -3.38295 |
| KLr = Coefficient Flow rate: r | 14.50377 | 14.50377 | 14.50377 |
| KLs = Coefficient Flow rate: s | 35.31467 | 35.31467 | 35.31467 |

Tab. 12 Flow rate parameters

Flow rate calculation formula (valid for installed compressor block type N 753)

$$Q = (a + b \times (\frac{p4-p1}{r}) + c \times (\frac{p1}{r}) \times (\frac{p4}{p1})^{d} + e \times (\frac{p1}{r}) \times n + f \times n^{2}) \times s$$

Description of formula:

- Q = Flow rate as per ISO 1217: 2009 (Annex C)
- n = Compressor rated speed
- p1 = Initial pressure [psi (g)]
- p4 = Final pressure [psi (g)]

Example for N 753 compressor block:

p1 = 100 psi(g)

p4 = 400 psi(g)

n = 1054 rpm

$$Q = (0.603187 + -0.0468106 \times (\frac{400-100}{14.50377}) + 0.0253737 \times (\frac{100}{14.50377}) \times (\frac{400}{100})^{(-2.11682)}$$

$$+ 0.00077485 \times (\frac{100}{14.50377}) \times 1054 + -0.00000001138 \times 1054^{2}) \times 35.31467$$

Q = 186 cfm

**Flow rate calculation formula** (valid for installed compressor block type N 1100)

$$Q = (a + b \times (\frac{p4-p1}{r}) + c \times (\frac{p1}{r}) \times (\frac{p4}{p1})^{d} + e \times (\frac{p1}{r}) \times n + f \times n^{0.5}) \times s$$

Description of formula:

- Q = Flow rate as per ISO 1217: 2009 (Annex C)
- n = Compressor rated speed
- p1 = Initial pressure [psi (g)]
- p4 = Final pressure [psi (g)]

**Example for N 1100 compressor block:**

p1 = 100 psi(g)

p4 = 400 psi(g)

n = 1054 rpm

$$Q = (0.0134438 + -0.0476777 \times (\frac{400-100}{14.50377}) + 0.0670051 \times (\frac{100}{14.50377}) \times (\frac{400}{100})^{-0.9540620}$$
$$+ 0.00104363 \times (\frac{100}{14.50377}) \times 1054 + 0.03055930 \times 1054^{0.5}) \times 35.31467$$

Q = 273 cfm

**Flow rate calculation formula** (valid for installed compressor block type N 2001)

$$Q = (k + a \times n + b \times (\frac{p4}{r}) + c \times (\frac{p1}{r}) + d \times (n)^2 + e \times n \times (\frac{p4}{r}) + f \times n \times (\frac{p1}{r})$$
$$+ g \times (\frac{p4}{r})^2 + h \times (\frac{p4}{r}) \times (\frac{p1}{r}) + i \times (\frac{p1}{r})^2) \times s$$

Description of formula:

- Q = Flow rate as per ISO 1217: 2009 (Annex C)
- n = Compressor rated speed
- p1 = Initial pressure [psi (g)]
- p4 = Final pressure [psi (g)]

**Example for N 2001 compressor block:**

p1 = 100 psi(g)

p4 = 350 psi(g)

n = 790 rpm

$$Q = (-3.38295 + 0.00914418 \times 790 + -0.0469224 \times (\frac{350}{14.50377}) + 0.331378 \times (\frac{100}{14.50377})$$
$$+ -0.00000388326 \times (790)^2 + -0.0000362599 \times 790 \times (\frac{350}{14.50377})$$
$$+ 0.00171004 \times 790 \times (\frac{100}{14.50377}) + 0.000629749 \times (\frac{350}{14.50377})^2$$
$$+ -0.00500716 \times (\frac{350}{14.50377}) \times (\frac{100}{14.50377}) + -0.000829702 \times (\frac{100}{14.50377})^2) \times 35.31467$$

Q = 377 cfm

## 2.10 Example for determining the permissible initial pressure

For more diagrams to be used when calculating the permissible initial pressure, see chapter 13.4.

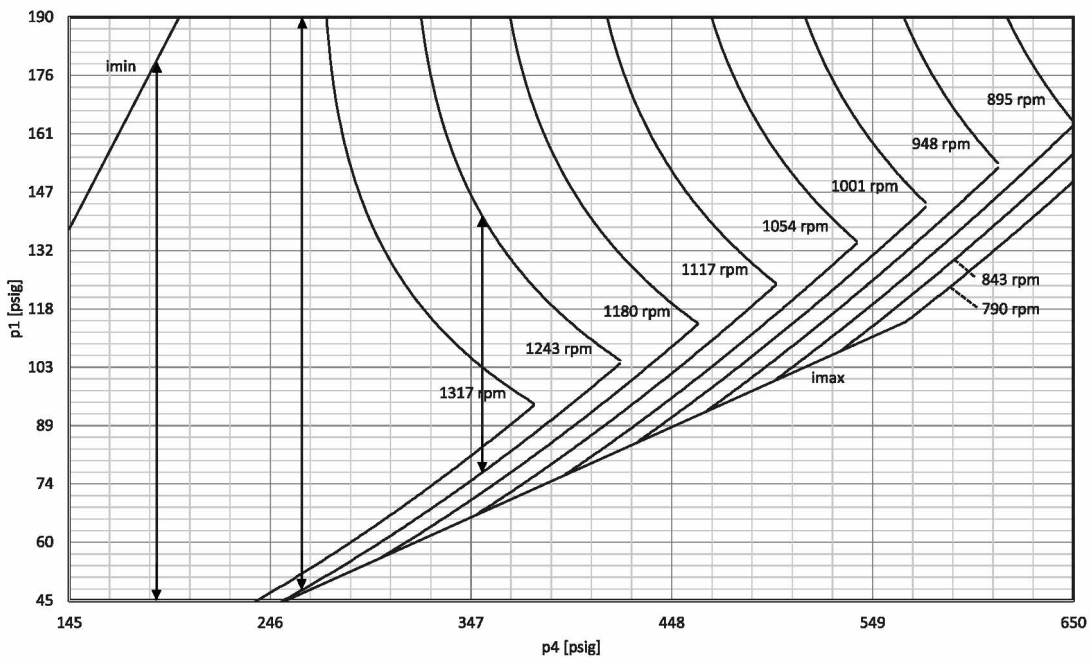


Fig. 1 Initial pressure diagram

Ⓐ p4=190 psi(g) 45 psi(g) ≤ p1 ≤ 178 psi(g) at all speeds
Ⓑ p4=260 psi(g) 50 psi(g) ≤ p1 ≤ 190 psi(g) at n= 1243 $min^{-1}$
Ⓒ p4=350 psi(g) 77 psi(g) ≤ p1 ≤ 140 psi(g) at n= 1243 $min^{-1}$

## 2.11 Calculating the configurable switching differential SD

**Star-delta machine**

$$SD = 14.5 \times \frac{Q}{4 \times \text{receiver size}} \text{ psi}$$

Condition SD < p4 – p1

Flow rate Q in cfm (according to ISO 1217:2009, Annex C)
Receiver size in $ft^3$
Switching differential SD in psi
Inlet pressure p1 in [psi (g)]
Final pressure p4 in [psi (g)]

| Example 1 | |
|---|---|
| Flow rate Q of machine | 307 cfm |
| Receiver size | 53 $ft^3$ |

| Example 1 | |
|---|---|
| **Inlet pressure p1** | 145 psi(g) |
| **Final pressure p4** | 580 psi(g) |

Tab. 13 Example 1

$$SD = 14.5 \times \frac{307}{4 \times 53} \text{ psi}$$

SD = 21.0 psi
Checking the condition:
p4 – p1 = 580 psi(g)–145 psi(g) = 435 psi > as switching differential SD 21.0 psi → Condition fulfilled

The set value for the switching differential SD at the controller must not be less than 21.0 psi.

| Example 2 | |
|---|---|
| **Flow rate Q of machine** | 505 cfm |
| **Receiver size** | 35 $ft^3$ |
| **Inlet pressure p1** | 145 psi(g) |
| **Final pressure p4** | 190 psi(g) |

Tab. 14 Example 2

$$SD = 14.5 \times \frac{505}{4 \times 35} \text{ psi}$$

SD = 52.3 psi
Checking the condition:
p4 – p1 = 190 psi(g)–145 psi(g) = 45 psi < as switching differential SD 52.3 psi → Condition **not** fulfilled

Receiver is too small.
**Selected new receiver size 70 $ft^3$**

$$SD = 14.5 \times \frac{505}{4 \times 70} \text{ psi}$$

SD = 26,1 psi
Checking the condition:
p4 – p1 = 190 psi(g)–145 psi(g) = 44 psi > as switching differential SD 26.1 psi → Condition fulfilled

The set value for the switching differential SD at the controller must not be less than 26.1 psi.

## 2.12 Noise emission [dB(A)]

| Mains frequency | DN 22 C | DN 30 C | DN 37 C / CXL | DN 45 C |
|---|---|---|---|---|
| 60 Hz | 79 / 77[1)] | 79 / 77[1)] | 79 / 77[1)] | 79 / 77[1)] |
| Noise pressure level in operation at maximum gauge working pressure and maximum attainable speed as per ISO 2151 and the basic standard ISO 9614-2, uncertainty: ±3 dB(A)<br>[1)] Option K9 | | | | |

Tab. 15 Noise emission [dB(A)]

## 2.13 Motors and power

### 2.13.1 Compressor motor

**Mains frequency: 60 Hz**

| | DN 22 C | DN 30 C | DN 37 C / CXL | DN 45 C |
|---|---|---|---|---|
| Rated power [hp] | 30 | 40 | 50 | 60 |
| Rated speed [rpm] | 3600 | 3600 | 3600 | 3600 |
| Enclosure protection | TEFC | TEFC | TEFC | TEFC |
| Motor bearing re-greasing interval [h] | 4000 | 4000 | 4000 | 4000 |
| Grease requirement, each bearing [g] | 10 | 10 | 10 | 10 |
| h = operating hours | | | | |

Tab. 16 Compressor motor (60Hz)

### 2.13.2 Option K1/K9 Fan motor

**Mains frequency: 60 Hz**

| | DN 22 C-DN 45 C |
|---|---|
| Rated power [hp] | 2.0 |
| Rated speed [rpm] | 1800 |
| Enclosure protection | TEFC |
| Motor bearing re-greasing interval [h] | 6000 |
| Grease requirement A-side bearing [g] | 5 |
| Grease requirement B-side bearing [g] | 3 |
| h = operating hours | |

Tab. 17 Fan motor (60Hz)

## 2.14 Compressor oil recommendation

The standard compressor oil is VDL 150.

For special applications FGP oil is used and the machine carries a sticker indicating this.

Information on ordering compressor oil is found in chapter 11.

➤ Mark the oil that your compressor contains in the table below.

| | Standard oil | Special oil |
|---|---|---|
| Oil type | VDL 150 | FGP |
| Description | Synthetic oil | Synthetic oil |
| Application | Standard oil for all applications except in connection with processing of foodstuffs. May contain traces of silicone. | Specially for use in compressors where the compressed air may occasionally come into contact with foodstuffs. |
| Oil contained in my compressor | | |
| * Cool to moderate ambient temperatures, low humidity, moderate to high duty cycle. | | |

Tab. 18 Compressor oil recommendation

### 2.14.1 Compressor oil charge quantity

| Type | Total charge [quarts] | Topping off volume [qt] (minimum–maximum) |
|---|---|---|
| N 753 | 5.0 | 0.5 |
| N 1100 | 5.0 | 0.5 |
| N 2001 | 5.0 | 0.5 |

Tab. 19 Compressor oil charge quantity

## 2.15 Power supply

#### Basic requirements

The machine is designed for an electrical supply according to National Electric Code (NEC), edition 2020, particularly article 670 and NFPA 79, edition 2018, particularly section 4.3. In the absence of any user-specified alternatives, the limits given in these standards must be adhered to. Consult manufacturer for any other specific power supply.

The incoming line within the control panel should be as short as possible.

If external sensors or communication lines are to be connected to the machine, use shielded cables and insert the same through EMC fittings into the control panel.

#### Three-phase

Do **NOT** operate package on any unsymmetrical power supply. Also do **NOT** operate package on power supplies such as a three phase WYE system with center point not solidly grounded or three-phase (open) delta.

The machine requires a symmetrical three-phase power supply transformer with a WYE configuration output as shown in Figure 2 and Figure 3. In a symmetrical three phase supply the phase angles and voltages are all the same.

Other power supplies are not suitable.

Fig. 2 Three-phase star (wye); 4 wire; center point solidly grounded

Fig. 3 Three-phase star (wye); 3 wire; center point solidly grounded

Further information Please contact an authorized KAESER service representative for options.

The electrical diagram 13.3 contains further specifications for electrical connection.

### 2.15.1 Power supply specifications

The following multi-strand copper core wires are given according to 2020 NEC 310.14, 310.15, 310.16 and table 310.16 for 40°C ambient temperature.

If other local conditions prevail, like for example high temperature, the cross section should be checked and adjusted according to 2020 NEC 110.14(C), 220.3, 310.14, 310.15, 310.16, table 310.15(B)(1), table 310.15(C)(1), 430.6, 430.22, 430.24, 670.4(A) and other local codes.

Dual element time delay fuses are selected according to 2020 NEC 240.6, 430.52 and tables 430.52, 430.248 and 430.250.

It is recommended to use a ground conductor the same size as the current carrying conductors, if local codes allow. Neither the minimum ground wire size as pointed out in 2020 NEC table 250.122 nor using conduit as the sole ground connection is recommended.

Further information The electrical diagram in chapter 13.3 contains further specifications for electrical connection.

**Rated power supply: 208V / 3ph / 60Hz**

| Type | DN 22 C | DN 30 C | DN 37 C / CXL | DN 45 C |
|---|---|---|---|---|
| Rated power [hp] | 30 | 40 | 50 | 60 |
| Pre-fuse [A] | 125 | 175 | 200 | 250 |
| Supply per phase and ground (75 °C) | AWG1/0 | AWG3/0 | AWG3/0 | MCM250 |
| Consumption [A] | 92.2 | 117.4 | 137.3 | 167.8 |

Tab. 20 Supply 208V / 3ph / 60Hz

**Rated power supply: 230V / 3ph / 60Hz**

| Type | DN 22 C | DN 30 C | DN 37 C / CXL | DN 45 C |
|---|---|---|---|---|
| Rated power [hp] | 30 | 40 | 50 | 60 |
| Pre-fuse [A] | 125 | 150 | 175 | 225 |

| Type | DN 22 C | DN 30 C | DN 37 C / CXL | DN 45 C |
|---|---|---|---|---|
| Supply per phase and ground (75 °C) | AWG1/0 | AWG2/0 | AWG3/0 | AWG4/0 |
| Consumption [A] | 96.1 | 107.6 | 125.5 | 153.8 |

Tab. 21 Supply 230V / 3ph / 60Hz

Rated power supply: 380V / 3ph / 60Hz

| Type | DN 22 C | DN 30 C | DN 37 C / CXL | DN 45 C |
|---|---|---|---|---|
| Rated power [hp] | 30 | 40 | 50 | 60 |
| Pre-fuse [A] | 70 | 100 | 110 | 125 |
| Supply per phase and ground (75 °C) | AWG4 | AWG3 | AWG2 | AWG1/0 |
| Consumption [A] | 48.3 | 65.2 | 76.6 | 93.4 |

Tab. 22 Supply 380V / 3ph / 60Hz

Rated power supply: 460V / 3ph / 60Hz

| Type | DN 22 C | DN 30 C | DN 37 C / CXL | DN 45 C |
|---|---|---|---|---|
| Rated power [hp] | 30 | 40 | 50 | 60 |
| Pre-fuse [A] | 60 | 80 | 90 | 110 |
| Supply per phase and ground (75 °C) | AWG6 | AWG4 | AWG3 | AWG2 |
| Consumption [A] | 42.2 | 53.8 | 63.2 | 76.9 |

Tab. 23 Supply 460V / 3ph / 60Hz

Rated power supply: 575V / 3ph / 60Hz

| Type | DN 22 C | DN 30 C | DN 37 C / CXL | DN 45 C |
|---|---|---|---|---|
| Rated power [hp] | 30 | 40 | 50 | 60 |
| Pre-fuse [A] | 45 | 60 | 70 | 90 |
| Supply per phase and ground (75 °C) | AWG8 | AWG4 | AWG4 | AWG3 |
| Consumption [A] | 32.1 | 43.0 | 50.5 | 61.5 |

Tab. 24 Supply 575V / 3ph / 60Hz

## 2.16 Option K9 Water-cooling

Cooling oil may contaminate the cooling water if a leak occurs.

➤ A special heat exchanger must be used for heating drinking water.

The specific heat capacity and required volume flow rate of the cooling water changes if anti-freeze is added.

➤ Consult an authorized KAESER service representative to ensure optimum cooling-system performance.

➤ Comply with the specified minimum requirements for the cooling water in order to avoid downtimes due to corrosion, calcification and contamination.

It is imperative that measures for cooling water treatment and filtration are implemented and performed.
KAESER can provide the names of companies specializing in cooling water analysis and the supply of suitable treatment devices.

The following design types are available:

- Option K9: Water cooling with bundled pipe heat exchanger: Chapter 2.17

### Open cooling system

An open cooling system may be a cooling circuit with open cooling towers for cooling via evaporation. As a portion of the cooling water evaporates, it must be replenished regularly. During evaporation, the material content of the cooling water concentrates and the contact with ambient air can contaminate the cooling water. When replenishing cooling water, you must ensure the minimum requirements for the cooling water.

### Closed cooling system

In a closed cooling system, the cooling water has not contact with the atmosphere. Thus, it cannot be contaminated by the atmosphere or enriched with oxygen, for example.

### Continuous-flow cooling system

A continuous-flow cooling system is an open cooling system. Ground, surface or drinking water circulate once through the cooling system.

Further information

The dimensional drawing in chapter 13.2 gives the flow direction, size and position of the connection ports.

## 2.17 Option K9 Water-cooling (shell and tube heat exchanger)

Some typical design examples are provided here. Individual conditions for each installation may vary from these guidelines.

➤ If required, enter your own individual values in the table provided.

➤ In the event of deviating design data, arrange for the SIGMA CONTROL 2 settings to be checked by KAESER service representative.

The primary side of the heat exchanger is connected to the machine. The following figures relate to the secondary side of the heat exchanger.

Individual design data

| | My value |
|---|---|
| Cooling water temperature rise [F] | — |
| Flow rate [gpm] | — |
| Pressure loss [psi] | — |

Tab. 25 Water cooling K9: Individual design data

## 2.17.1 Component specifications

| Feature | Value |
|---|---|
| Material (Heat exchanger) | CuNi10Fe |
| Maximum gauge working pressure, air side [psig] | 725 |
| Maximum gauge working pressure, water side [psig] | 145 |
| Minimum permissible inlet temperature[1)], water side [°F] | 14 |
| Maximum permissible inlet temperature, water side [°F] | 203 |
| Unsuitable cooling media | Seawater<br>Always consult KAESER regarding the suitability of cooling water solutions |

[1)] Suitable antifreeze required.

Tab. 26 Component specifications (Option K9)

## 2.17.2 Cooling water quality

| Characteristics/content | Approximate concentration range in [mg/l] | Evaluation |
|---|---|---|
| pH value | <6.0 | 0 |
| | 6.0 to 9.0 | + |
| | >9.0 | 0 |
| Chlorides (Cl) [mg/l] | Up to 1000 | + |
| | >1000 | + (<25000mg/l) |

+ ≙ Normally sound resistance
0 ≙ Problems with corrosion may occur, particularly when multiple factors are evaluated as 0
– ≙ High corrosion levels (use not recommended)

| Characteristics/content | Approximate concentration range in [mg/l] | Evaluation |
|---|---|---|
| Sulfate ($SO_4$) [mg/l] | Up to 70 | + |
| | 70 to 300 | + |
| | >300 | + (<3000mg/l) |
| Nitrate ($HNO_3$) [mg/l] | Up to 100 | + |
| | >100 | 0 |
| Free (aggressive) carbon dioxide | Up to 200 | + |
| | 20 to 50 | 0 |
| | >50 | – |
| Oxygen ($O_2$) | Up to 2 | + |
| | >2 | + |
| Ammonium ($NH_4^+$) [mg/l] | Up to 2 | + |
| | 2 to 20 | + |
| | >20 | 0 |
| Iron (Fe), dissolved [mg/l] | Up to 10 | 0 |
| | >10 | – |
| Manganese (Mn), dissolved [mg/l] | Up to 1 | 0 |
| | >1 | – |
| Free chlorine | Up to 5 | Permanent chlorination + <0.5mg/l |
| | >5 | Shock chlorination + <3mg/l |
| Sulphite ($SO_4$) [mg/l] | | 0 |
| Ammonia | | + (<15mg/l) |

+ ≙ Normally sound resistance
0 ≙ Problems with corrosion may occur, particularly when multiple factors are evaluated as 0
– ≙ High corrosion levels (use not recommended)

Tab. 27 Cooling water quality (shell and tube heat exchanger)

### 2.17.3 Design data for the cooling system

**Cooling water temperature rise by 18° F:**

| | DN 22 C | DN 30 C | DN 37 C | DN 37 CXL | DN 45 C |
|---|---|---|---|---|---|
| Maximum permissible inlet temperature [°F] | 104 | 104 | 104 | 104 | 104 |
| Flow rate [gpm] | 3.0 | 4.4 | 5.2 | 7,9 | 6.6 |
| Pressure loss [psi] | 3.0 | 3.0 | 4.3 | 7.2 | 5.8 |

Tab. 28 Cooling water temperature (ΔT=18° F)

## 2.18 Machine duty cycle

The machine control guarantees a 100% duty cycle.

# 3 Safety and Responsibility

## 3.1 Basic instructions

The machine is manufactured to the latest engineering standards and acknowledged safety regulations. Nevertheless, dangers can arise through its operation:

- danger to life and limb of the operator or third parties,
- impairments to the machine and other material assets.

⚠ Disregard of warning or safety instructions can cause serious injuries!

➤ Use this machine only if it is in a technically perfect condition and only for the purpose for which it is intended; observe all safety measures and the instructions in the service manual.

➤ Immediately rectify (have rectified) any faults that could be detrimental to safety!

## 3.2 Specified use

The machine is intended solely for generating compressed air for industrial use. Any other use is considered incorrect. The manufacturer is not liable for any damages that may result from incorrect use. The user alone is liable for any risks incurred.

➤ Keep to the specifications listed in this service manual.

➤ Operate the machine only within its performance limits and under the permitted ambient conditions.

## 3.3 Improper use

Improper usage can cause damage to property and/or (severe) injuries.

➤ Only use the machine as intended.

➤ Never direct compressed air at persons or animals.

➤ Use hot cooling air for heating purposes only if there is no risk to the health of humans or animals. If necessary, hot cooling air should be treated by suitable means.

➤ Do not operate the machine in areas in which specific requirements with regard to explosion protection are in force.

## 3.4 User's responsibilities

### 3.4.1 Observe statutory and universally accepted regulations

This is, for example, nationally applied European directives and/or valid national legislation, safety and accident prevention regulations.

➤ Observe relevant statutory and accepted regulations during installation, operation and maintenance of the machine.

### 3.4.2 Qualified personnel

These are people who, by virtue of their training, knowledge and experience as well as their knowledge of relevant regulations can assess the work to be done and recognize the possible dangers involved.

Authorized operators possess the following qualifications:

- are of legal age,
- are conversant with and adhere to the safety instructions and sections of the operating manual relevant to operation,
- have received adequate training and authorization to safely operate electrical and compressed air devices.

Authorized installation and maintenance personnel have the following qualifications:

- are of legal age,
- must have read, be conversant with and adhere to the safety instructions and sections of the operating manual applicable to installation and maintenance,
- are fully conversant with the safety concepts and regulations of electrical and compressed air engineering,
- are able to recognize the possible dangers of electrical and compressed air devices and take appropriate measures to safeguard persons and property,
- have received adequate training in and authorization for the safe installation and maintenance of this machine.

➤ Ensure that personnel entrusted with operation, installation and maintenance are qualified and authorized to carry out their tasks.

### 3.4.3 Compliance with Inspection Schedules and Accident Prevention Regulations

The machine is subject to local inspection schedules.

➤ The user must ensure that, for compressors with motor power above 0.5 hp, safety devices are annually inspected for their proper function.

➤ Keep to inspection intervals in accordance with the Ordinance on Industrial Health and Safety with maximum intervals as laid down in §16:

The inspection intervals are laid down in the technical specification for the compressed air after-cooler. Inspection intervals are dependent on the pressure/volume product, i.e. max. permitted pressure (PS) in bar, times the aftercooler volume (V) in liters.

**Example:** Volume V = 90 l and max. permitted pressure PS = 11 bar (160 psi), pressure/volume product = 990.

| Inspection | Inspection interval | Inspection authority |
|---|---|---|
| Installation and equipment inspection | Before commissioning if PS x V ≤ 200 | Competent person (e. g. KAESER SERVICE technician) |
| | Before commissioning on compressors with type approval (Ordinance on Industrial Safety and Health, annex 5 no. 25) PS x V ≤ 1000. | Competent person (e. g. KAESER SERVICE technician) |
| | Before commissioning if PS x V > 200. | Approved supervisory body |
| Internal inspection | Every 5 years after installation or the last inspection if pressure PS x volume V ≤ 1000 | Competent person (e. g. KAESER SERVICE technician) |
| | Every 5 years* after installation or the last inspection if PS x V > 1000. | Approved supervisory body |
| Strength test | Every 10 years after installation or the last inspection if PS x V ≤ 1000 | Competent person (e. g. KAESER SERVICE technician) |
| | Every 10 years* after installation or the last inspection if PS x V > 1000. | Approved supervisory body |
| * Inspection intervals are determined by the user in consultation with the approved supervisory body. The responsible authority is to be notified not later than 6 months after commissioning (if pressure (PS) x volume (V) > 1000). Intervals given are the maximum in each case. | | |

Tab. 29 Inspection intervals according to Ordinance on Industrial Health and Safety

## 3.5 Dangers

**Basic instructions**

The following describes the various forms of danger that can occur during machine operation.

Basic safety instructions are found in this service manual at the beginning of each chapter in the section entitled “Safety”.

Warning instructions are found before a potentially dangerous task.

### 3.5.1 Safely dealing with sources of danger

The following describes the various forms of danger that can occur during machine operation.

### Electricity

Touching voltage carrying components can result in electric shocks, burns or death.

- ➤ Allow only qualified and authorized electricians or trained personnel under the supervision of a qualified and authorized electrician to carry out work on electrical equipment according to electrical engineering regulations.
- ➤ Before commissioning or re-commissioning the machine, the user must make sure there is adequate protection against electric shock from direct or indirect contact.
- ➤ Before starting any work on electrical equipment:
  Switch off and lock out the power supply disconnecting device and check that no voltage is present.
- ➤ Switch off any external power sources.
  These could be connections to floating relay contacts or electrical machine heating, for example.
- ➤ Use fuses corresponding to machine power.
- ➤ Check regularly that all electrical connections are tight and in proper condition.

### Forces of compression

Compressed air is contained energy. Uncontrolled release of this energy can cause serious injury or death. The following information concerns work on components that could be under pressure.

- ➤ Close shut-off valves or otherwise isolate the machine from the distribution network to ensure that no compressed air can flow back into the machine.
- ➤ Depressurize all pressurized components and enclosures.
- ➤ Do not carry out welding, heat treatment or mechanical modifications to pressurized components (e.g. pipes and vessels) as this influences the component's resistance to pressure.
  The safety of the machine is then no longer ensured.

### Compressed air quality

The composition of the compressed air must be suitable for the actual application in order to preclude health and life-threatening dangers.

- ➤ Use appropriate systems for air treatment before using the compressed air from this machine as breathing air and/or for the processing of foodstuffs.
- ➤ Use foodstuff-compatible cooling oil whenever compressed air is to come into contact with foodstuffs.

### Spring forces

Springs under tension or compression store energy. Uncontrolled release of this energy can cause serious injury or death.
Pressure/check valves, solenoid valves and inlet valves are powerfully spring-loaded.

- ➤ Do not open or dismantle any valves.

### Rotating components

Touching the fan while the machine is running can result in serious injury.

- ➤ Do not open the enclosure while the machine is switched on.
- ➤ Switch off and lock out the power supply disconnecting device, and verify the absence of any voltage.

- ➤ Wear close-fitting clothes and a hair net if necessary.
- ➤ Ensure that all covers and safety guards are in place and secured before re-starting.

### Temperature

High temperatures are generated during compression. Touching hot components may cause injuries.

- ➤ Avoid contact with hot components.
  These include, for example, compressor blocks, compressed air pipes, coolers, motors and machine heaters.
- ➤ Wear protective clothing.
- ➤ If welding is carried out on or near the machine, take adequate measures to prevent sparks or heat from igniting oil vapors or parts of the machine.

### Noise

The enclosure absorbs the machine noise to a tolerable level. This function will be effective only if the enclosure is closed.

- ➤ Operate the machine only with intact sound insulation.
- ➤ Wear hearing protection if necessary.
  The blowing-off of the safety relief valve can be particularly loud.

### Operating fluids/materials

The used operating fluids and materials can cause adverse health effects. Suitable safety measures must be taken in order to prevent injuries.

- ➤ Strictly forbid fire, open flame and smoking.
- ➤ Follow safety regulations when dealing with oils, lubricants and chemical substances.
- ➤ Avoid contact with skin and eyes.
- ➤ Do not inhale oil mist and vapors.
- ➤ Do not eat or drink while handling cooling and lubricating fluids.
- ➤ Keep suitable fire extinguishing agents ready for use.
- ➤ Use only KAESER approved operating materials.

### Unsuitable spare parts

Unsuitable spare parts compromise the safety of the machine.

- ➤ Use only spare parts approved by the manufacturer for use in this machine.
- ➤ Use only genuine KAESER pressure components.

### Conversion or modification of the machine

Modifications, additions to and conversions of the machine or the controller can result in unpredictable dangers.

- ➤ Do not convert or modify the machine!
- ➤ Obtain written approval by the manufacturer prior to any technical modification or expansion of the machine, the controller, or the control programs.

#### Extending or modifying the compressed air station

If dimensioned appropriately, safety relief valves reliably prevent an impermissible rise in pressure. New dangers may arise if you modify or extend the compressed air station.

- ➤ When extending or modifying the compressed air station
  Check the blow-off capacity of safety relief valves on air receivers and compressed air lines before installing a new machine.
- ➤ If the blow-off capacity is insufficient:
  Install safety relief valves with larger blow-off capacity.

### 3.5.2 Safe machine operation

The following is information supporting you in the safe handling of the machine during individual product life phases.

#### Personal protective equipment

When working on the machine you may be exposed to dangers that can result in accidents with severe adverse health effects.

- ➤ Wear protective clothing as necessary.

Suitable protective clothing (examples):

- Safety work wear
- Protective gloves
- Safety boots
- Eye protection
- Ear protection

#### Transporting

The weight and size of the machine require safety measures during its transport to prevent accidents.

- ➤ Use suitable lifting gear that conforms to local safety regulations.
- ➤ Allow transportation only by personnel trained in the safe movement of loads.
- ➤ Attach lifting gear only to suitable lifting points.
- ➤ Be aware of the center of gravity to avoid tipping.
- ➤ Make sure the danger zone is clear of personnel.
- ➤ Do not step onto machine components to climb up the machine.

#### Assembly

- ➤ Only use electrical cables that are suitable and approved for the surroundings and electrical loads applied.
- ➤ Never dismantle compressed air pipes until they are fully vented.
- ➤ Only use pressure lines that are suitable and approved for the maximum working pressure and the intended medium.
- ➤ Do not allow connection pipes to be placed under mechanical stress.
- ➤ Do not induce any forces into the machine via the connections, so that the compressive forces must be balanced by bracing.

### Positioning

A suitable installation location for the machine prevents accidents and faults.

- ➤ Install the machine in a suitable compressor room.
- ➤ Ensure sufficient and suitable lighting such that the display can be read and work carried out comfortably and safely.
- ➤ Ensure accessibility so that all work on the machine can be carried out without danger or hindrance.
- ➤ If installed outdoors, the machine must be protected from frost, direct sunlight, dust, rain and splashing water.
- ➤ Do not operate in areas in which specific requirements with regard to explosion protection are in force.
- ➤ Ensure adequate ventilation.
- ➤ Place the machine in such a manner that the working conditions in its environment are not impaired.
- ➤ Comply with limit values for ambient temperature and humidity.
- ➤ The intake air must not contain any damaging contaminants,
  Damaging contaminants are for instance: explosive or chemically instable gases and vapors, acid or base forming substances such as ammonia, chlorine or hydrogen sulfide.
- ➤ Do not position the machine in the warm exhaust air flow from other machines.
- ➤ Keep suitable fire extinguishing agents ready for use.

### Commissioning, operation and maintenance

During commissioning, operation and maintenance you may be exposed to dangers resulting from, e.g., electricity, pressure and temperature. Careless actions can cause accidents with severe adverse effects for your health.

- ➤ Allow maintenance work to be carried out only by authorized personnel.
- ➤ Wear close-fitting, flame-resistant clothing. Wear protective clothing as necessary.
- ➤ Switch off and lock out the power supply disconnecting device and verify the absence of any voltage.
- ➤ Check that there is no voltage on floating relay contacts.
- ➤ Close shut-off valves or otherwise isolate the machine from the compressed air network to ensure that no compressed air can flow back into the machine.
- ➤ Depressurize all pressurized components and enclosures.
- ➤ Allow the machine to cool down.
- ➤ Do not open the cabinet while the machine is switched on.
- ➤ Do not open or dismantle any valves.
- ➤ Use only spare parts approved by KAESER for use in this machine.
- ➤ Carry out regular inspections:
  for visible damages,
  of safety installations,
  of the EMERGENCY STOP push button,
  of any components requiring monitoring.
- ➤ Pay particular attention to cleanliness during all maintenance and repair work. Cover components and openings with clean cloths, paper or tape to keep them clean.

- ➤ Do not leave any loose components, tools or cleaning rags on or in the machine.
- ➤ Components removed from the machine can still be dangerous.
  Do not attempt to open or destroy any components taken from the machine.

**Decommissioning, storage and disposal**

Improper handling of old operating fluids and components represent a danger for the environment.

- ➤ Drain off fluids and dispose of them according to environmental regulations.
  These include, for example, compressor oil and cooling water.
- ➤ Have refrigerant disposed of by authorized bodies only.
- ➤ Dispose of the machine in accordance with local environmental regulations.

### 3.5.3 Organizational Measures

- ➤ Designate personnel and their responsibilities.
- ➤ Give clear instructions on reporting faults and damage to the machine.
- ➤ Give instructions on fire reporting and fire-fighting measures.

### 3.5.4 Danger areas

The table gives information on areas dangerous to personnel.

Only authorized personnel may enter these areas.

| Function | Danger area | Authorized personnel |
|---|---|---|
| Transport | Within a 10 ft. radius around the machine | Installation personnel for transport preparation<br>No personnel during transport |
| | Beneath the lifted machine | No personnel! |
| Installation | Within the machine<br>Within a 3 ft. radius of the machine and its power supply cables | Installation personnel |
| Operation | Within a 3 ft. radius around the machine | Operating personnel |
| Maintenance | Within the machine<br>Within a 3 ft. radius around the machine | Maintenance personnel |

Tab. 30 Danger areas

## 3.6 Safety devices

Various safety devices ensure safe working with the machine.

- ➤ Do not change, bypass or disable safety devices.
- ➤ Check safety devices for correct function regularly.
- ➤ Do not remove or damage labels and notices.
- ➤ Ensure that labels and notices are clearly legible.

Further information More information on safety devices is contained in chapter 4, section 4.3.

## 3.7 Service life of safety functions

Pursuant to ISO 13849-1: 2015, the category and Performance Level (PL) of the machine's safety functions have been analyzed and assessed:

| Safety function | Category | Performance Level |
|---|---|---|
| EMERGENCY STOP push button | 1; 3 | c |
| Check safety shut down when opening the machine (door limit switch) | 1; 3 | c |
| Cooler compressed air inlet temperature switch | 1; 3 | c |

Tab. 31 Category and Performance Level

The safety-relevant components of the safety functions are designed for a service life of 20 years. The service life starts with the commissioning, and is not extended by times during which the machine was not in use.

The following components are affected:

- EMERGENCY STOP push button
- Main contactor
- Door limit switch
- Cooler compressed air inlet temperature switch

1. Have the components of the safety functions replaced after a service life of 20 years by an authorized KAESER service representative.
2. Have the reliability of the safety functions checked by an authorized KAESER service representative.

## 3.8 Safety signs

The diagram shows the position of the safety signs on the machine. The table lists the various safety signs used and their meanings.

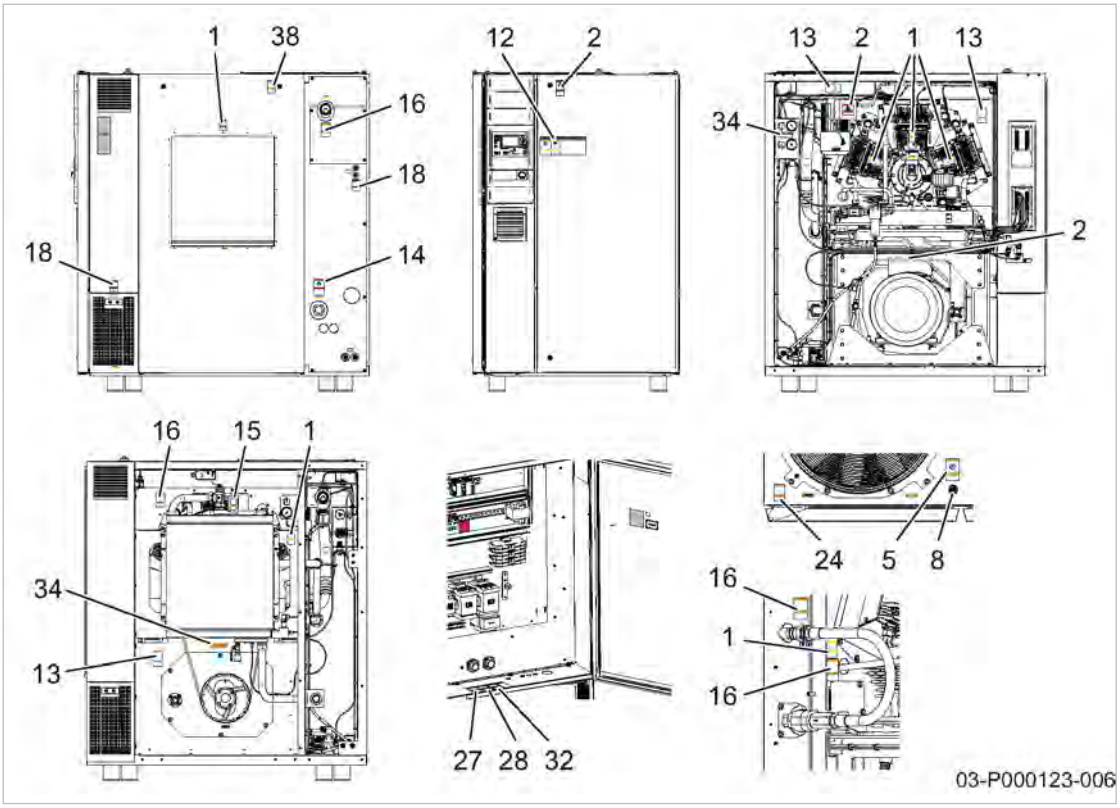


Fig. 4 Location of safety signs

| Item | Symbol | Meaning |
|---|---|---|
| 1 | | Hot surface can cause burns!<br>➤ Let the machine cool down.<br>➤ Work carefully.<br>➤ Wear long-sleeved garments (not synthetics such as polyester) and protective gloves. |
| 2 | | HAZARDOUS VOLTAGE!<br>Touching electrically live components can cause serious injury or death.<br>➤ Isolate completely from the power supply (all conductors) and ensure the supply cannot be switched on again (lock out).<br>➤ Check that no voltage is present. |
| 5 | | Flying debris!<br>Severe injury, especially of the eyes, could result while the fan is rotating.<br>➤ Prevent all materials from falling into the fan guard.<br>➤ Never work over the running machine.<br>➤ Isolate completely from the power supply (all conductors) and ensure the supply cannot be switched on again (lock out). |
| 8 | | Danger of falling or damage to the machine!<br>➤ Do not sit or walk on the enclosure.<br>➤ Do not place or store any load on the enclosure. |

| Item | Symbol | Meaning |
|---|---|---|
| 12 | | Injury and/or machine defects caused by improper use!<br>➤ Maintenance should be performed by properly trained personnel only.<br>➤ Read and understand manual and all safety labels before switching the machine on.<br>➤ Never remove or cover safety labels. |
| | | Machine starts automatically!<br>Severe injury could result from rotating components, electrical voltage and air pressure.<br>➤ Isolate completely from the power supply (all conductors) and ensure the supply cannot be switched on again (lock out).<br>➤ Check that no voltage is present. |
| 13 | | Severe injury could result from touching the fan blades while it is rotating!<br>➤ Never switch the machine on without guard in place over the fan blade.<br>➤ Isolate completely from the power supply (all conductors) and ensure the supply cannot be switched on again (lock out). |
| 14 | | Injury and/or contamination can result from breathing compressed air!<br>Contamination of food can result from using untreated compressed air for food processing!<br>➤ Never breathe untreated compressed air.<br>➤ Air from this compressor must meet OSHA 29 CFR1910.134 and FDA 21 CFR178.3570 standards, if used for breathing or food processing.<br>➤ Use proper compressed air treatment.<br>Food grade coolant must be used for food processing. |
| 15 | | Loud noise when safety relief valve opens! Ear damage and burns can occur.<br>➤ Wear ear protection and protective clothing.<br>➤ Close all maintenance doors and cover panels. |
| 16 | | Serious injury or death can result from loosening or opening component under pressure!<br>➤ Depressurize all pressurized components and enclosures.<br>➤ Ensure that the machine remains depressurized.<br>➤ Check that machine is depressurized. |
| 18 | | Bearing damage due to re-greasing in standstill!<br>➤ Re-grease the bearings only with the motor running.<br>➤ Use only ESSO UNIREX N3 bearing grease.<br>➤ For lubrication interval and volume required, please refer to service manual. |
| 24 | | Risk of hand injury without safety guard!<br>➤ Never switch the machine on without guard in place over the fan blade. |
| 27 | | Risk of fire or electric shock!<br>If the interrupter has tripped, current-carrying components of the controller should be examined and replaced if damaged to reduce the risk of fire or electric shock. |

| Item | Symbol | Meaning |
|---|---|---|
| 28 | | Risk of fire or electric shock!<br>To maintain overcurrent, short-circuit and ground-fault protection, the manufacturers instructions for setting the interrupter must be followed to reduce the risk of fire or electric shock. |
| 32 | | EXTERNAL VOLTAGE!<br>Touching electrically live components can cause serious injury or death.<br>➤ Isolate completely from the power supply (all conductors) and ensure the supply cannot be switched on again (lock out).<br>➤ Check that no voltage is present. |
| 34 | | Serious injury can result from compressed air.<br>➤ Do not direct air stream at body. |
| 38 | | Risk of hand injury during machine run-on!<br>➤ Wait at least 1 minute following machine shutdown before opening enclosure. |

Tab. 32 Safety signs

## 3.9 Information signs

The table lists the various information signs used and their meanings.

| Sign | Meaning |
|---|---|
| | Maintain the air filter regularly. |
| 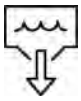 | Condensate drainage<br>Check the function of the condensate drainage at regular intervals. |
| | Check the oil level regularly and change the oil at the correct intervals. |

Tab. 33 Information signs

## 3.10 Emergency situations

### 3.10.1 Correct fire fighting

#### Suitable measures

Calm and prudent action can safe lives in the event of a fire.

➤ Keep calm.

➤ Give the alarm.

- ➤ Shut off supply lines if possible.
  Power supply disconnecting device (all phases)
  Cooling water (if present)
- ➤ Warn and move endangered personnel to safety.
- ➤ Help incapacitated persons.
- ➤ Close the doors.
- ➤ When trained accordingly: Attempt to extinguish the fire.

**Extinguishing substances**

- ➤ Suitable extinguishing media:
  Foam
  Carbon dioxide
  Sand or soil
- ➤ Unsuitable extinguishing media:
  Strong jet of water

### 3.10.2 Treating injuries from handling cooling oil

**Eye contact:**

Compressor oil can cause irritation.

- ➤ Rinse open eyes thoroughly for a few minutes under running water.
- ➤ Seek medical help if irritation persists.

**Skin contact:**

Compressor oil may irritate after prolonged contact.

- ➤ Wash thoroughly with skin cleaner, then with soap and water.
- ➤ Contaminated clothing should be dry-cleaned before reuse.

**Inhalation:**

Oil mist may make breathing difficult.

- ➤ Clear air passages of oil mist.
- ➤ Seek medical help if difficulty with respiration continues.

**Ingestion:**

- ➤ Wash out the mouth immediately.
- ➤ Do not induce vomiting.
- ➤ Seek medical aid.

## 3.11 Warranty

This operator manual contains no independent warranty commitment. Our general terms and conditions of business apply with regard to warranty.

A condition of our warranty is that the machine is used for the purpose for which it is intended under the conditions specified.
Due to the multitude applications for which the machine is suitable the obligation lies with the user to determine its suitability for his specific application.

In addition, we accept no warranty obligation for:

- the use of unsuitable parts or operating materials,
- unauthorized modifications,
- incorrect maintenance,
- incorrect repair.

Correct maintenance and repair includes the use of original spare parts and operating materials.

➤ Obtain confirmation from KAESER that your specific operating conditions are suitable.

## 3.12 Environmental protection

The operation of this machine may cause dangers for the environment.

➤ Do not allow compressor oil to escape into the environment or into the sewage system.

➤ Store and dispose of operating materials and replaced parts in accordance with local environmental protection regulations.

➤ Observe national regulations.
This applies particularly to parts contaminated with compressor oil.

# 4 Design and Function

## 4.1 Enclosure

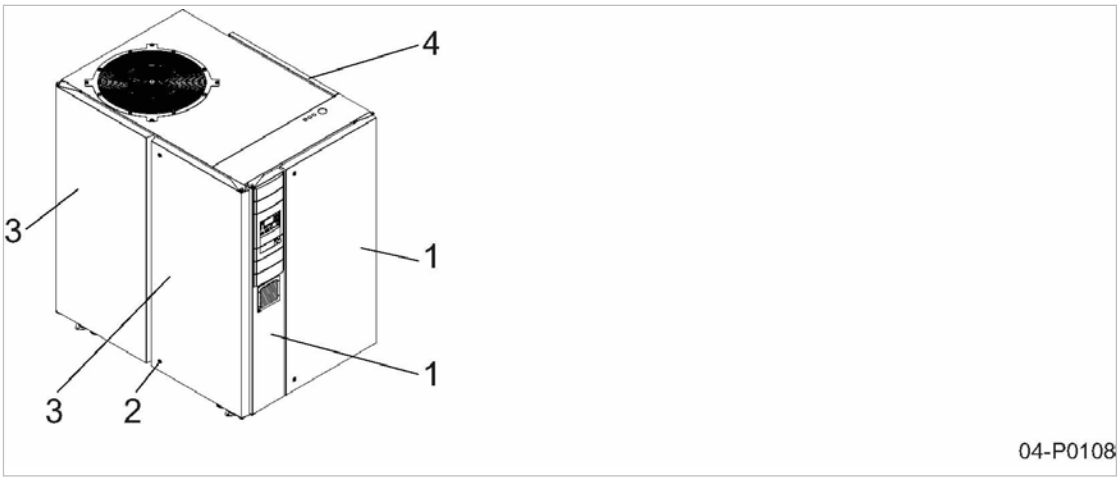


Fig. 5 Enclosure overview

| | | | |
|---|---|---|---|
| 1 | Control cabinet door | 3 | Access door |
| 2 | Latch | 4 | Panel (removable) |

The enclosure, when closed, serves various functions:

- Sound insulation
- Protection against contact with components
- Cooling air flow

The enclosure is not suitable for the following uses:

- Walking on, standing or sitting on.
- As resting place or storage of any kind of load.

Safe and reliable operation is only assured with the enclosure closed.

Access doors are hinged to swing open, removable panel must be lifted off.
Latches are released by a key supplied with the machine.

## 4.2 Machine function

The description uses an air-cooled machine as an example.

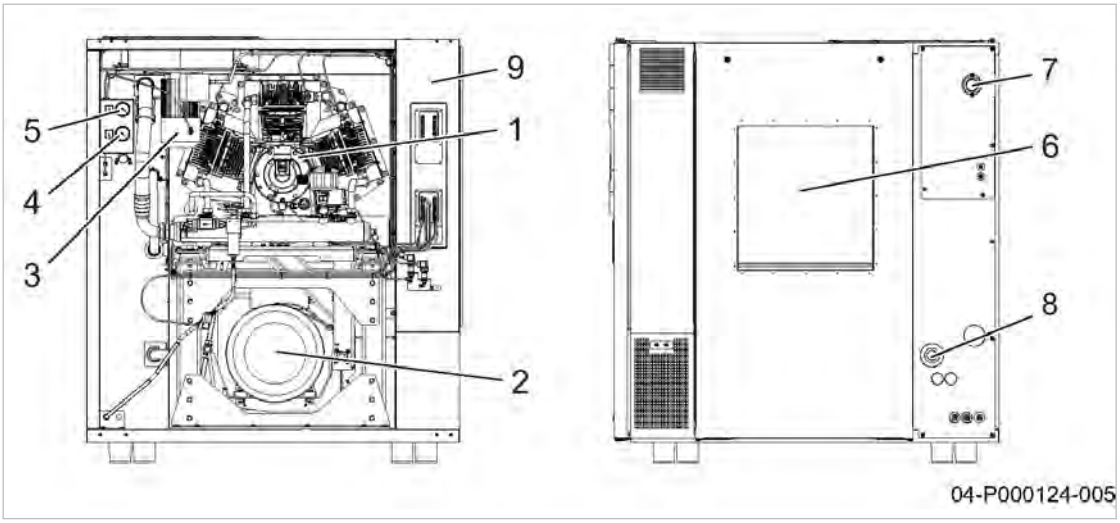


Fig. 6 Machine overview

1. Compressor block
2. Compressor drive motor
3. Fan motor
4. Network pressure gauge (inlet pressure)
5. Network pressure gauge (final pressure)
6. Compressed air cooler
7. Compressed air inlet
8. Compressed air outlet
9. Control cabinet

### 4.2.1 Description

The compressor block is driven by an electric motor via V-belts.

The block has three cylinders.

The cooling fins at the cylinder and the cylinder head dissipate the heat which is driven by a fan out of the machine's interior.

Under LOAD, the inlet valve is opened and the safety relief valve is closed.
The pre-compressed air is sent through opened inlet valve into the compressor block and transported into the high-pressure system through the opened check valve and the cooler.
During this process, the cooler cools the compressed air.

## 4.3 Safety devices

The following safety devices are provided and may not be modified in any way:

- EMERGENCY STOP push button:
  Stops the machine immediately in an emergency situation. The motor is stopped. The pressure system is vented.
- Safety relief valve:
  The safety relief valve protects the system against excessive pressure. It is factory set.
- Door interlock switch:
  The machine will stop automatically if a safety interlocked door or panel is opened or removed.
- Enclosures and guards for moving parts and electrical connections:
  Protect against unintentional contact.
- Temperature sensors:
  Trigger machine shut down if impermissible high temperatures occur.

- Cooler compressed air inlet temperature switch:
  A fault message is displayed if the machine exceeds the compressed air inlet temperature at the cooler.
- Pressure transducers:
  Monitors the pressure conditions at various locations in the machine.

## 4.4 Operating panel SIGMA CONTROL 2

**Keys**

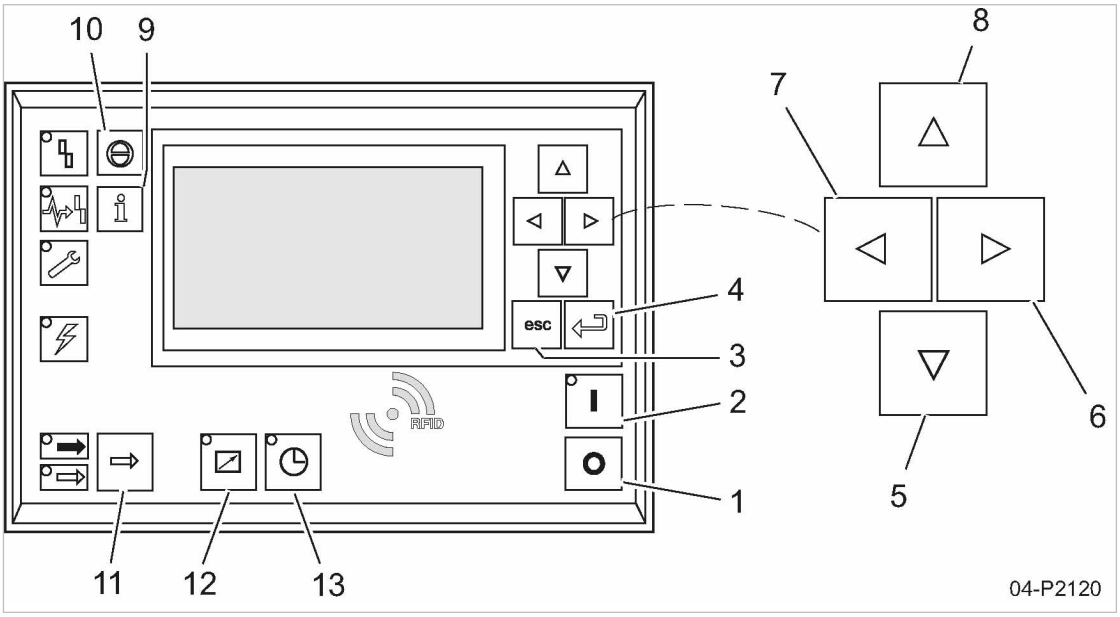


Fig. 7 Keys – overview

| Item | Name | Function |
|---|---|---|
| 1 | «OFF» | Switches the machine off. |
| 2 | «ON» | Switches the machine on. |
| 3 | «Escape» | Returns to the next higher menu option level.<br>Exits the edit mode without saving. |
| 4 | «Enter» | Jumps to the selected menu option.<br>Exits the edit mode and saves. |
| 5 | «Down» | Scrolls down the menu options.<br>Reduces a parameter value. |
| 6 | «Right» | Jumps to the right.<br>Moves the cursor position to the next right field. |
| 7 | «Left» | Jumps to the left.<br>Moves the cursor position to the next left field. |
| 8 | «Up» | Scrolls up the menu options.<br>Increases a parameter value. |
| 9 | «Events & Information» | Operating mode:<br>Displays the event memory. |

| Item | Name | Function |
|---|---|---|
| 10 | «Acknowledgement» | Confirms/acknowledges alarms and warning messages.<br>If permissible: Resets the fault counter (RESET). |
| 11 | «LOAD/IDLE» | Toggles between the LOAD and IDLE operating modes. |
| 12 | «Remote control» | Switches the remote control on and off. |
| 13 | «Timer control» | Switches the timer control on and off. |

Tab. 34 Keys

**LEDs**

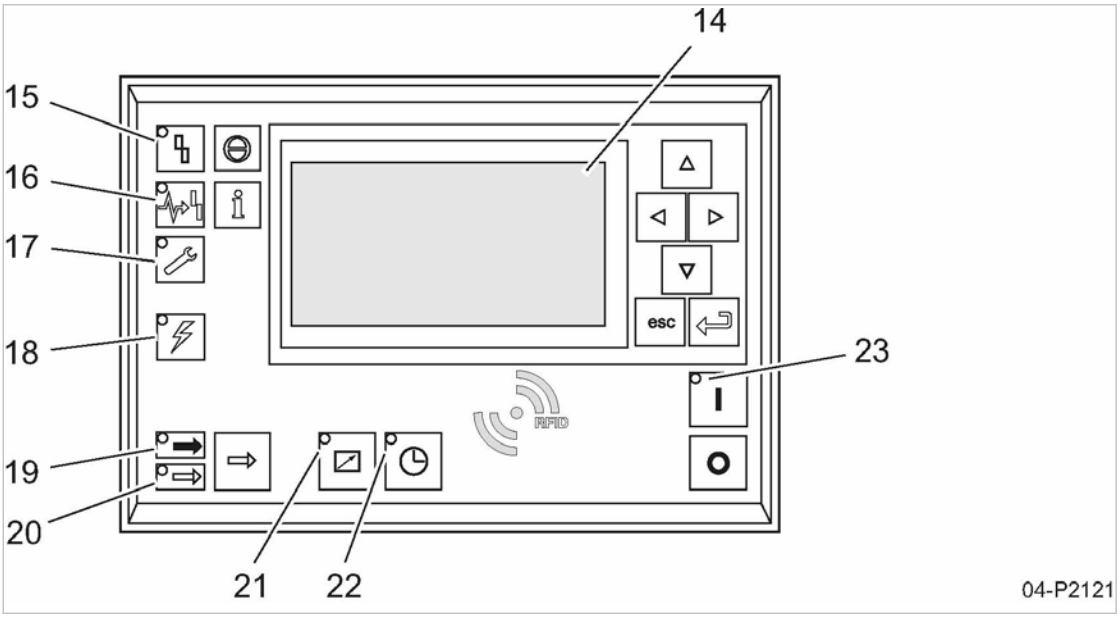


Fig. 8 Indicators – overview

| Item | Name | Function |
|---|---|---|
| 14 | Indicator field or display | Graphic display with 8 lines and 30 characters per line. |
| 15 | *Fault* | Flashes red to indicate a machine fault.<br>Continuous red light after acknowledgement. |
| 16 | *Communication* | Continuous red illumination if a communication connection (Ethernet, USS, COM modules) has a fault. |
| 17 | *Warning* | Flashes in yellow in the following events:<br>■ Maintenance work due<br>■ Warning message<br><br>Lights yellow continuously when acknowledged. |
| 18 | *Control voltage* | Lights green when the power supply is switched on. |
| 19 | *LOAD* | Lights green when the compressor is running under LOAD. |
| 20 | *IDLE* | Lights green when the compressor is running in IDLE.<br>Flashes when the «LOAD/IDLE» toggle key is pressed. |

| Item | Name | Function |
|---|---|---|
| 21 | *Remote control* | The LED lights when the machine is in remote control. |
| 22 | *Timer control* | The LED lights when the machine is in clock control (timer). |
| 23 | *Machine ON* | Lights green when the machine switched on. |

Tab. 35 Indicators

#### RFID sensor field

RFID is the abbreviation for “**R**adio **F**requency **I**dentification” and makes possible to identify persons and objects.
Placing a suitable transponder in front of the RFID sensor field of the controller will automatically activate the communication between transponder and SIGMA CONTROL 2.

A suitable transponder is the KAESER RFID Equipment Card. Two of them have been provided with the machine.

Typical application:

- Users log on to the machine.
  (no manual input of the password required.)

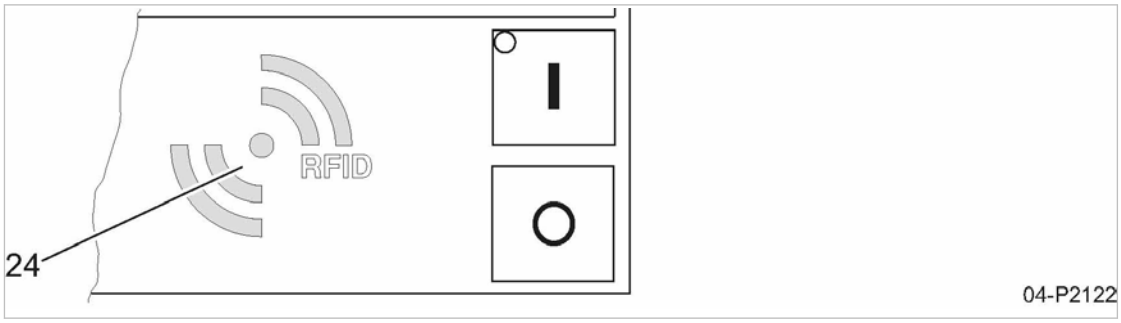


Fig. 9 RFID sensor field

| Item | Name | Function |
|---|---|---|
| 24 | RFID | RFID sensor field for the communication with a suitable RFID transponder. |

Tab. 36 RFID sensor field

Further information More information about the use of RFID technology is provided in the SIGMA CONTROL 2 operating manual.

## 4.5 Operating modes and control modes

### 4.5.1 Machine operating modes

#### STOP

The machine is connected to the power supply.
The *Controller voltage* LED lights green.
The machine is switched off. The *Machine ON* LED is extinguished.

READY

The machine has been activated with «ON»:

- The *ON* LED lights green.
- The drive motor is stopped.
- The inlet valve is closed.
- The relief valve is open.
- The check valve upstream of the cooler prevent the compressed air from flowing back from the high-pressure side into the compression stage.

The compressor motor starts as soon as system pressure is lower than the set point pressure (cut-off pressure).

In addition, timing and/or remote control may affect the start of the motor.

LOAD

The compressor motor runs under load.

- The inlet valve is open.
- The venting valve is closed.
- The compressor block delivers compressed air to the system.

IDLE

The compressor motor runs unloaded with low power consumption.

- The inlet valve is closed.
- The inlet control valve is closed.
- The relief valve is open.

Air is taken from the atmosphere and blown through the relief valve back to atmosphere.

### 4.5.2 Control modes

Using the selected control mode, the controller switches the machine between its various operational states in order to compensate for air being drawn by consumers, and to maintain the system pressure between the set minimum and maximum values. The control mode also rules the degree of energy efficiency of the machine.

The machine-dependant venting phase between the LOAD and READY operating modes ensures load changes at minimum material stresses.

The controller SIGMA CONTROL 2 can operate in the following modes:

- DUAL
- QUADRO
- DYNAMIC
- VARIO

Energy-efficient control modes for various applications:

| Application | Recommended control mode |
|---|---|
| Compressed air station with one machine or several machines with comparable delivery | VARIO |
| Machine for peak load in a compressed air station | VARIO |
| Machine for intermediate load in a compressed air station | DYNAMIC* |
| Machine for basic load in a compressed air station | DYNAMIC* |
| * At exceedingly high pressure fluctuations and/or drive motor starts (current peaks), switch from DYNAMIC to VARIO. | |

Tab. 37 Energy-efficient control modes

The SIGMA CONTROL 2 controller is factory set to DYNAMIC control mode unless specifically ordered otherwise.

### DUAL

In the DUAL control mode, the machine is switched back and forth between LOAD and IDLE to maintain the machine working pressure between the preset minimum and maximum values. When maximum pressure is reached, the machine switches to IDLE. When the preset *idling time* has elapsed, the machine switches to READY.

The *idling time* is factory preset according to the maximum starting frequency of the compressor motor. The shorter the *idling time* setting, the sooner (and more frequently) the drive motor is stopped.

### QUADRO

In contrast to the DUAL regulating mode, the machine will switch from LOAD to READY in QUADRO mode after periods with low compressed air consumption.

After periods with a high compressed air consumption, the machine will switch from LOAD to READY after passing through IDLE.

In this control mode, the controller requires two specified times: The *running time* and the *idle/standstill time*.

The shorter these times are set, the sooner (and more frequently) the motor is stopped.

### DYNAMIC

In contrast to the DUAL regulating mode, the machine will switch from LOAD to READY in DYNAMIC mode at low drive motor temperature.

And from LOAD via IDLE to READY at a high drive motor temperature.

The lower the drive motor temperature, the sooner (and, therefore, more often and longer) it is stopped.

### VARIO

The VARIO mode is based on the DUAL control mode. The difference to DUAL is that the *idling time* is automatically lengthened or shortened to compensate for higher or lower machine starting frequencies.

## 4.6 Oil level monitoring

SIGMA CONTROL 2 will issue a warning when the oil level is too low.

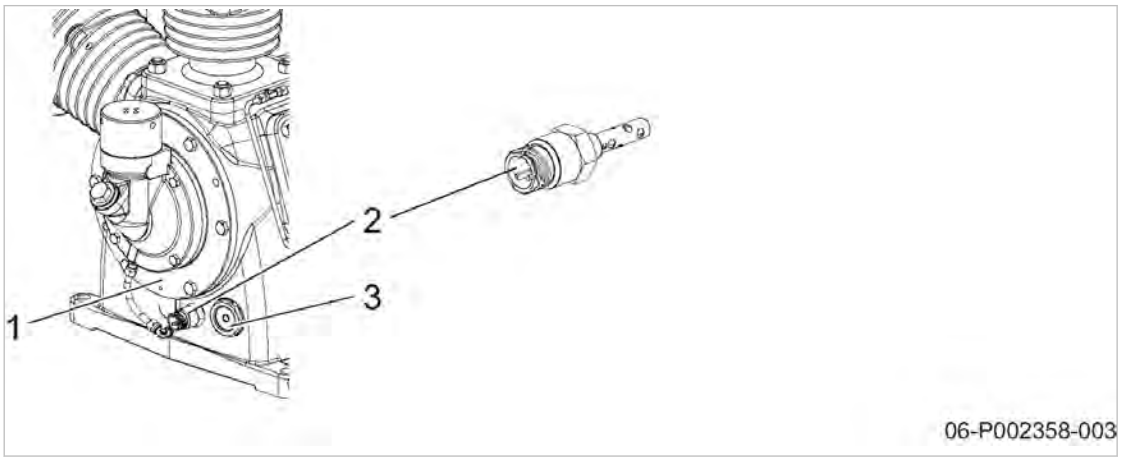


Fig. 10 Oil level monitoring

1 Compressor block
2 Oil level sensor
3 Oil sight glass

➤ Regular visual check of the oil level is necessary despite oil level monitoring.

## 4.7 Floating relay contacts

Floating relay contacts for the transmission of messages are provided.
Information on location, loading capacity, and message type is found in the electrical wiring diagram.

If the floating relay contacts are connected to an external power source, they may be under power even when the machine is isolated from the power supply.

## 4.8 Options

The options available for your machine are described below.

### 4.8.1 Option F14 KAESER FILTER KB ECO-DRAIN

- KAESER FILTER KB removes aerosols and solid particles from the intake compressed air.

Condensate is removed via an electronic condensate drain, which opens automatically as soon as sufficient liquid has accumulated in the filter housing. The electronic condensate drain can be swivelled horizontally through 360 degrees.

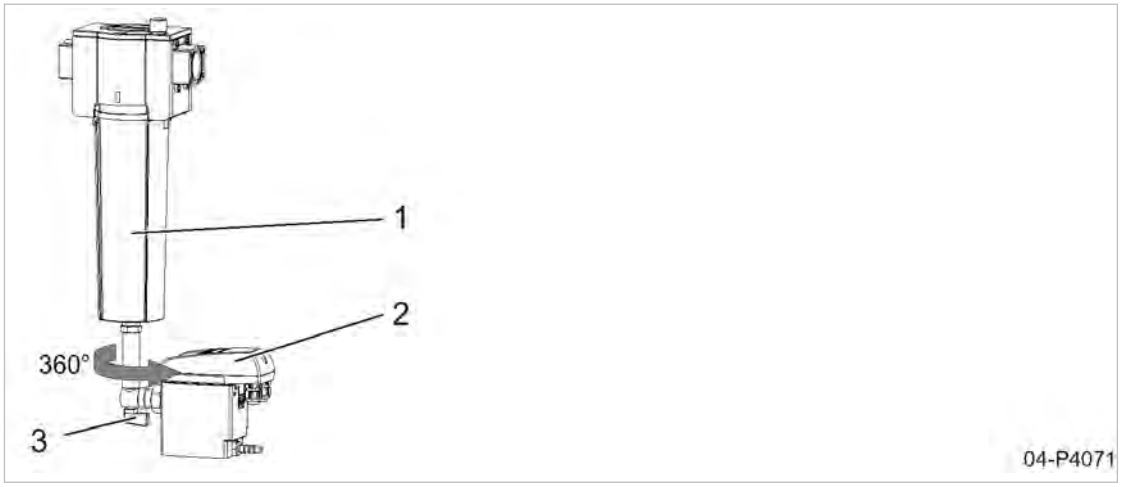


Fig. 11 Option F14 KAESER FILTER KB ECO-DRAIN

1 KAESER FILTER KB
2 Electronic condensate drain
3 Shut-off valve

Further information A description of the option codes can be found in chapter 2.3.
The information provided in chapter 6.5 is also valid for the condensate line.

### 4.8.2 Option H1 Machine mountings

These mountings allow the machine to be anchored firmly to the floor.

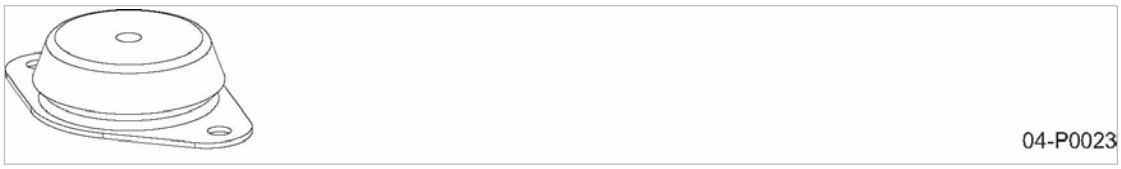


Fig. 12 Machine mountings

### 4.8.3 Option H4 Oil collection tray

Any leaks occurring at the machine are captured by the oil collection tray.

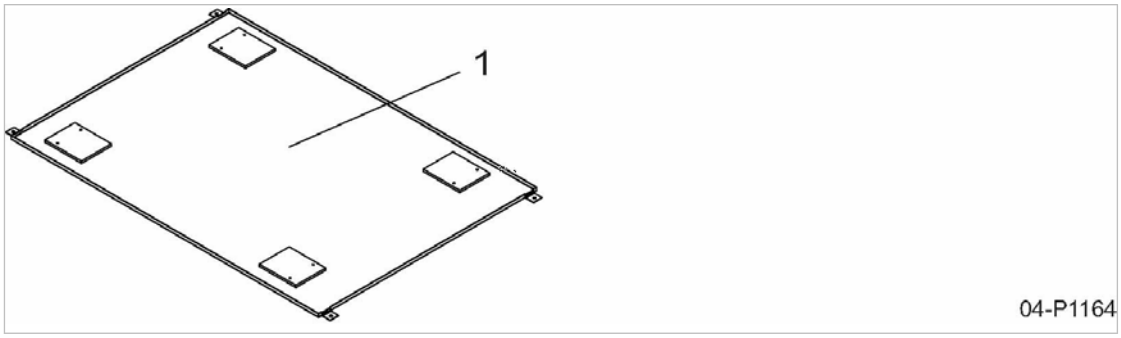


Fig. 13 Oil collection tray

1 Oil collection tray

### 4.8.4 Option K6 Electronic condensate drain

The condensate accumulating in the compressed air cooler is removed by an electronic condensate drain.

The electronic condensate drain is additionally equipped with a contact for malfunction (alarm function). A floating contact will transmit a signal in the event of a fault.

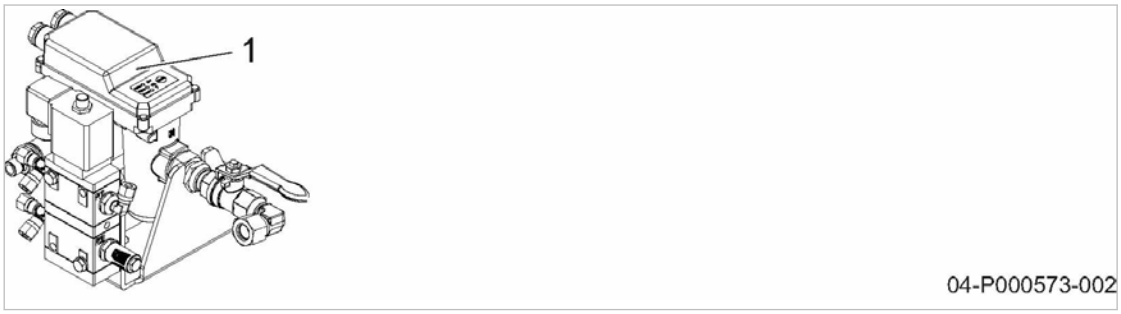


Fig. 14 Option K6: Electronic condensate drain

1 Condensate drain

#### Condensate drain operating states

The operating states of the condensate drain are displayed by LEDs:

| Display | Operating state | Function |
|---|---|---|
| 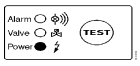 | *Ready to operate* | Voltage is applied. |
| | Draining | Drain line open |
| 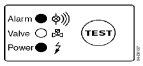 | *Fault/alarm* | Fault occurred.<br>Valve opens and closes repeatedly in an attempt to clear the fault. |
| | Test of the valve function | Press the push-button for approximately 2 seconds to test the valve function. |
| | Test the alarm function | To test the alarm function, press and hold the button for at least 1 minute. |

Tab. 38 Option K6: Electronic condensate drain operating states

### 4.8.5 Option K9 Water-cooling

Bundled-pipe heat exchangers are used in water-cooled machines.

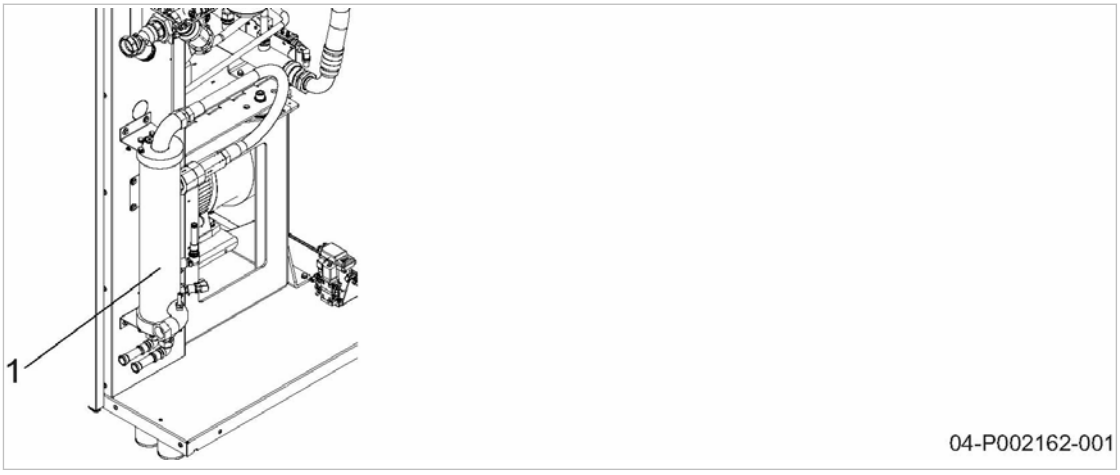


Fig. 15 Water cooling (Option K9)

1 Air cooler (water-cooled)

# 5 Installation and Operating Conditions

## 5.1 Ensuring safety

The conditions in which the machine is installed and operated have a decisive effect on safety.

Warning instructions are located before a potentially dangerous task.

Disregard of warning instructions can cause serious injuries!

### Complying with safety notes

Disregard of safety notes can cause unforeseeable dangers!

- ➤ Strictly forbid fire, open flame and smoking.
- ➤ If welding is carried out on or near the machine, take adequate measures to prevent sparks or heat from igniting oil vapors or parts of the machine.
- ➤ Do not store inflammable material in the vicinity of the machine.
- ➤ The machine is not explosion-proof!
  Do not operate in areas in which specific requirements with regard to explosion protection are in force.
- ➤ Ensure sufficient and suitable lighting such that the display can be read and work carried out comfortably and safely.
- ➤ Use a duct to discharge the machine exhaust air to the outside. Exhaust air openings must not be closed.
- ➤ Keep suitable fire extinguishing agents ready for use.
- ➤ Ensure that required ambient conditions are maintained.

Required ambient conditions may be:

- Maintain ambient temperature and humidity
- Ensure the appropriate composition of the air within the machine room:
  - clean with no damaging contaminants (e.g., dust, fibers, fine sand)
  - free of explosive or chemically unstable gases or vapors
  - free of acid/alkaline forming substances, particularly ammonia, chlorine or hydrogen sulfide.

## 5.2 Installation conditions

### 5.2.1 Determining location and clearances

The machine is intended for installation in a suitable machine room. Information on wall clearances and ventilation is given below.

The clearances specified are recommended clearances and ensure unhindered access to all machine parts.

➤ In the event that these cannot be complied with, please consult an authorized KAESER service representative for further advice.

Precondition The floor must be level, firm and capable of bearing the weight of the machine.

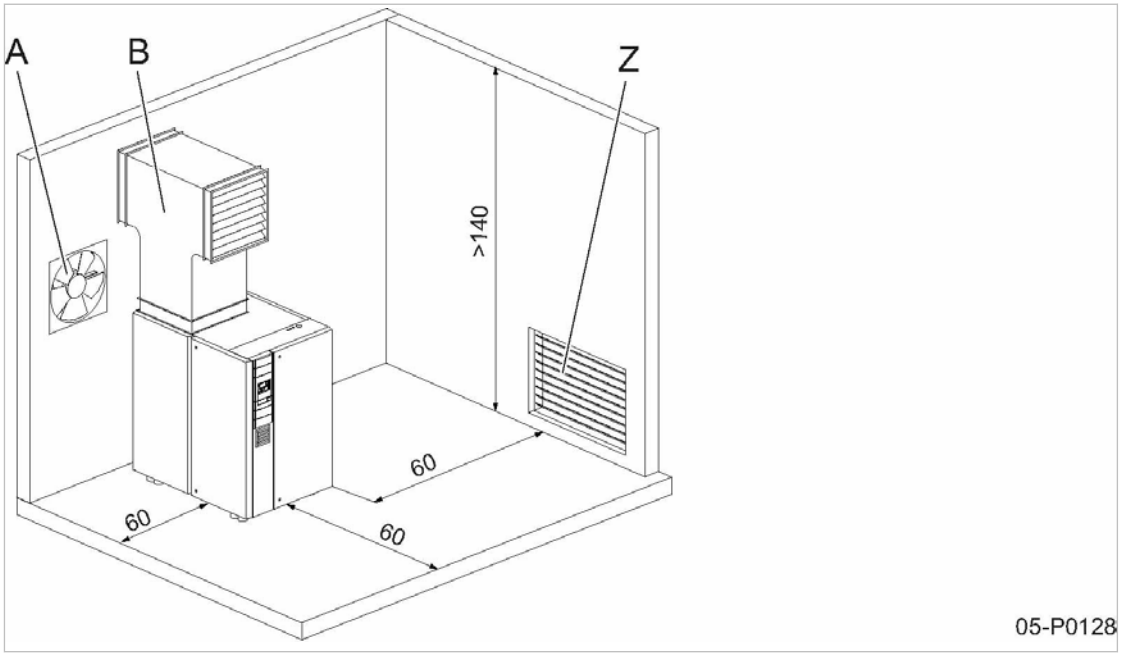


Fig. 16 Recommended installation, distances [in]

(A) Exhaust fan
(B) Exhaust air duct
(Z) Ventilation inlet air opening

1. **NOTICE** *Ambient temperature too low!*
   *Frozen condensate and highly viscous compressor oil can cause damage when starting the machine.*
   - ➤ *Ensure that the temperature of the machine is at least +37°F before switching it on.*
   - ➤ *Heat the machine room sufficiently or install a auxiliary heater.*
2. Ensure accessibility and adequate lighting so that all work on the machine can be carried out without danger or hindrance.
3. Ensure that the indicators can be read without glare and that the controller display cannot be damaged by direct sunlight (UV radiation).
4. Ensure that all air inlet and exhaust air openings in the enclosure remain open.
5. Observe additional clearances in accordance with local occupational safety and building regulations, so as to ensure that escape and rescue routes can be reached safely even when the machine enclosure is open.

If the machine is installed in a location containing other equipment (compressors, refrigerated dryers, etc.), then **under no circumstances** may hot exhaust air be directed towards the cooling air inlet side of the machine.
Hot exhaust air can cause damage to the machine.

## 5.2.2 Ensuring adequate machine room ventilation

In the absence of an exhaust air duct, a high-performance exhaust fan must be installed at the user-end (see chapter 2.7).

Adequate ventilation of the machine room fulfils several functions:

- It conveys exhaust heat away from the machine, thus ensuring the necessary operating conditions.

➤ In the event that conditions for adequate ventilation of the machine room cannot be guaranteed, please consult an authorized KAESER service representative or further advice.

1. Ensure that the volume of air flowing into the machine room is at least equivalent to that being removed from it by the machine and exhaust fan.
2. Ensure that the machine and exhaust fan can only be operated when the air inlet opening is open.
3. Keep the inlet and exhaust openings free from obstructions so that the cooling air can flow freely through the machine room.
4. Ensure clean air so as to support the proper functioning of the machine.

Further information See chapter 13.2 for dimensions of air inlet and exhaust air openings.

### 5.2.3 Exhaust air ducting design

The exhaust air duct serves to convey away the cooling air, which results in the room heating up less than it would otherwise (lower air inlet requirement).

On the air inlet and exhaust air side, the machine can only overcome the air resistance stipulated within its design specifications. Any additional air resistance will reduce the airflow and negatively affect cooling of the machine.

Consult an authorized KAESER service representative before determining:

- Design of the exhaust air ducting
- Junction between machine and exhaust air ducting
- Length of the ducting
- Number of bends in the ducting
- Design of flaps or shutters

➤ Consult KAESER for advice.

## 5.3 Using the machine in a compressed air system

When the machine is connected to a compressed air network, the network working pressure may not exceed the permissible final pressure of the machine.

When charging a fully vented air system there is generally a very high rate of airflow through the air treatment devices. These conditions are detrimental to correct air treatment. Air quality suffers.
To ensure the desired air quality when charging a vented air network, we recommend the installation of an air main charging system.

➤ Consult KAESER for advice on this subject.

# 6 Installation

## 6.1 Ensuring safety

Follow the instructions below for safe installation.

Warning instructions are located before a potentially dangerous task.

⚠ Disregard of warning instructions can cause serious injuries!

### Complying with safety notes

Disregard of safety notes can cause unforeseeable dangers!

- ➤ Follow the instructions in chapter 3 “Safety and Responsibility”.
- ➤ Installation work may only be carried out by authorized personnel.
- ➤ Make sure that no one is working on the machine.
- ➤ Ensure that all service doors and panels are locked.

### When working on live components

Touching voltage carrying components can result in electric shocks, burns or death.

- ➤ Work on electrical equipment may only be carried out by authorized electricians.
- ➤ Switch off and lock out the power supply disconnecting device and check that no voltage is present.
- ➤ Check that there is no voltage on floating relay contacts.

### When working on the compressed air system

Compressed air is contained energy. Uncontrolled release of this energy can cause serious injury or death. The following safety concerns relate to any work on components that could be under pressure.

- ➤ Close shut-off valves or otherwise isolate the machine from the compressed air network to ensure that no compressed air can flow back into the machine.
- ➤ Depressurize all pressurized components and enclosures (see chapter 10.13).
- ➤ Do not open or dismantle any valves.

### When working on the drive system

Touching voltage carrying components can result in electric shocks, burns or death.
Touching the fan while the machine is running can result in serious injury.

- ➤ Switch off and lock out the power supply disconnecting device and check that no voltage is present.
- ➤ Do not open the cabinet while the machine is switched on.

Further information

Details of authorized personnel are found in chapter 3.4.2.

Details of dangers and their avoidance are found in chapter 3.5.

## 6.2 Reporting transport damage

1. Check the machine for visible and hidden transport damage.
2. Inform the carrier and the manufacturer in writing of any damage without delay.

## 6.3 Connecting the machine to the compressed air network

Install flexible compressed air lines that run as directly as possible to the low-pressure and high-pressure sides of the machine. If the lines are directed upwards, 90 ° bends may be required.

Use a swan neck pipe for the compressed air connection to the low-pressure and high-pressure networks.

Condensate in the compressed air network can damage the piping:

- ➤ Only use corrosion-resistant piping.
- ➤ Use fluoroelastomers as the material for the seals.
- ➤ Take the electrochemical series into account.
- ➤ Consult KAESER regarding suitable materials for the compressed air network.
- ➤ Do not introduce or discharge any forces to/from the machine for which the compressive forces must be compensated by bracing.

Precondition Fully vent the compressed air network (see chapter 10.13).

**⚠ WARNING**

*High pressure!*
*High, pulsating and rising pressures.*

- ➤ *Avoid compressive forces entering/exiting the machine by using appropriate bracing (fixed point) for the compressed air lines.*

### 6.3.1 Connecting the machine to the low-pressure network

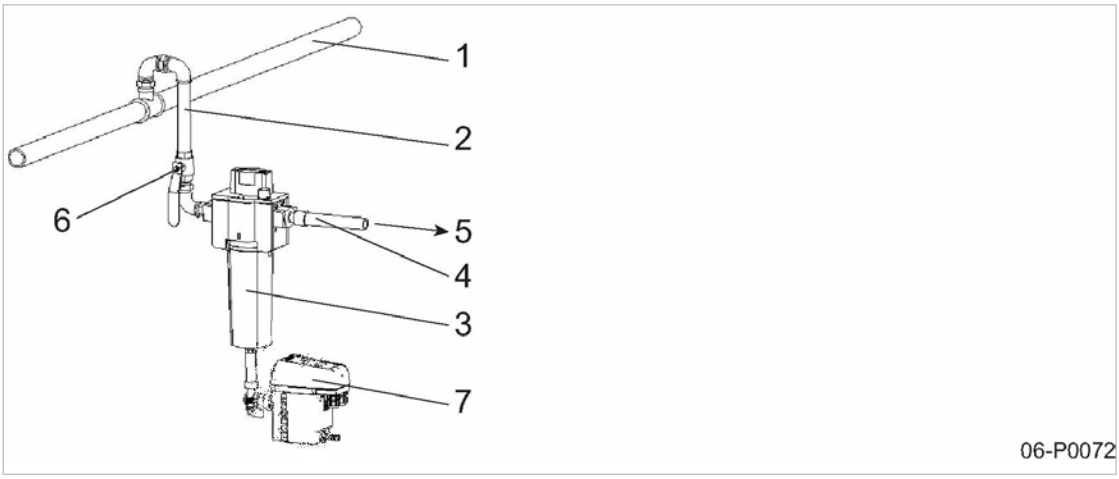


Fig. 17 Low-pressure network connection

1. Compressed air line
2. Low-pressure network
3. KAESER FILTER KB
4. Flexible pressure line
5. Machine (compressed air inlet)
6. User-end shut-off valve
7. Electronic condensate drain

➤ Install a KAESER FILTER KB to ensure that the inlet air is free from condensate and dirt (when Option F14 is selected, a KAESER FILTER KB is not required at the user-end).

1. **⚠ WARNING** *Serious injury can result from loosening or opening components under pressure!*
   ➤ *Fully vent all pressurized components and enclosures.*
   ➤ *A shut-off valve must be installed by the user in the connecting line.*
2. Connect the machine to the low-pressure network using a flexible compressed air line.

### 6.3.2 Connecting the machine to the high-pressure network

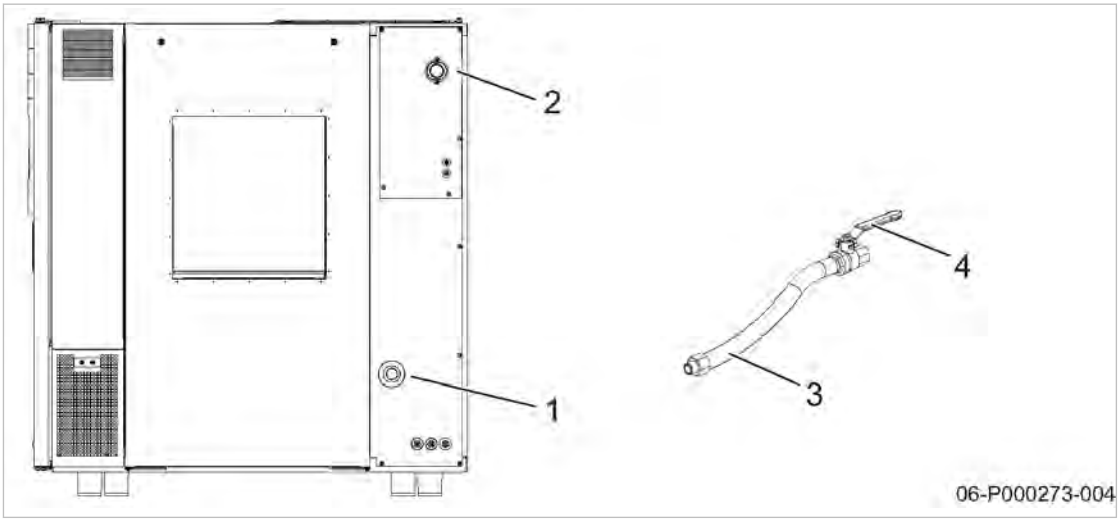


Fig. 18 High-pressure network connection

| | | | |
|---|---|---|---|
| 1 | Machine (compressed air outlet) | 3 | Flexible compressed air line |
| 2 | Machine (compressed air inlet) | 4 | User-end shut-off valve |

➤ Install an electronic condensate drain to prevent condensate from flowing back into the machine.

1. **⚠ WARNING** *Serious injury can result from loosening or opening components under pressure!*
   ➤ *Fully vent all pressurized components and enclosures.*
2. A shut-off valve must be installed by the user in the connecting line.

➤ Connect the machine to the high-pressure network using a flexible compressed air line.

Further information For the size and positions of the compressed air connections, see the dimensional drawing in chapter 13.2.

Piping example with Option K6

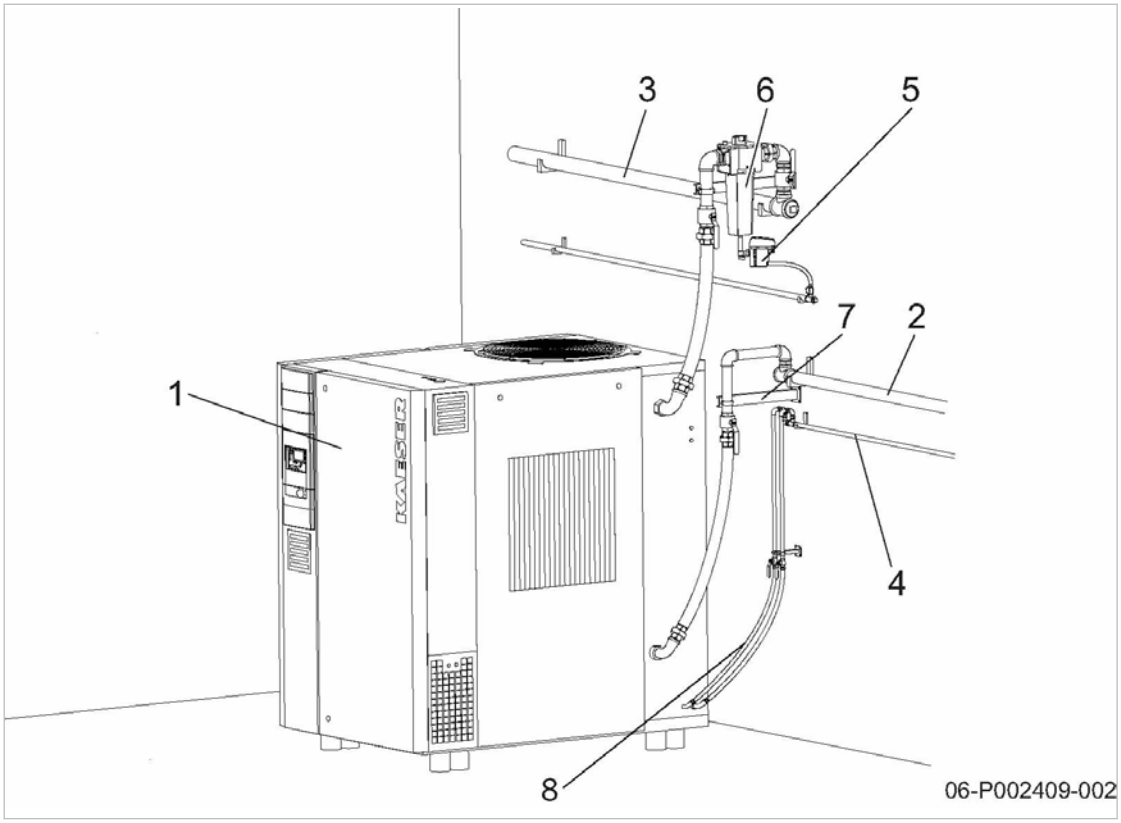


Fig. 19 Piping example with Option K6

| | | | |
|---|---|---|---|
| 1 | Booster | 5 | Electronic condensate drain |
| 2 | High-pressure network | 6 | KAESER FILTER KB |
| 3 | Low-pressure network | 7 | Fixed point |
| 4 | Condensate line | 8 | Condensate line, Option K6 |

➤ Shut-off valves must be installed by the user in the condensate line.

When Option F14 is selected, a KAESER FILTER KB is not required at the user-end.

Piping example without Option K6

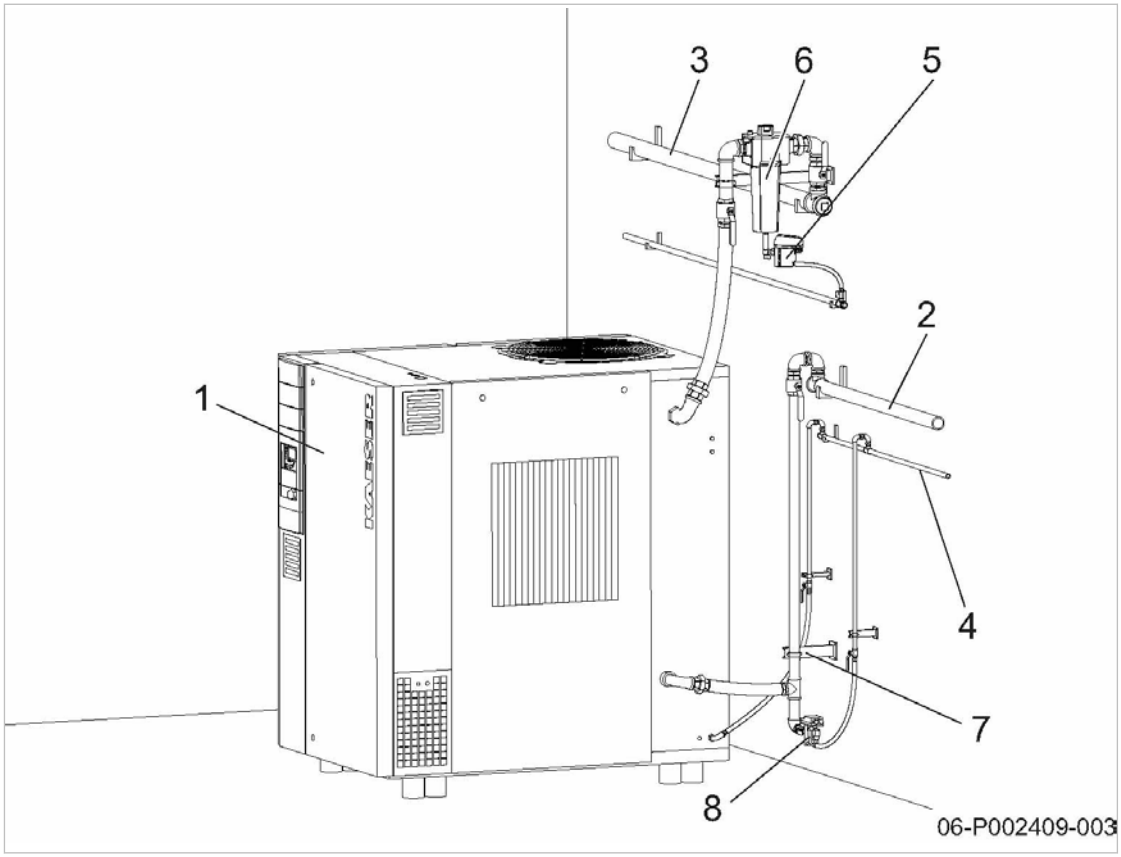


Fig. 20 Piping example without Option K6

1. Booster
2. High-pressure network
3. Low-pressure network
4. Condensate line
5. Electronic condensate drain
6. KAESER FILTER KB
7. Fixed point
8. Electronic condensate drain (high pressure)

➤ A shut-off valve must be installed by the user in the condensate line.

➤ Install the electronic condensate drain (high pressure) as a water trap in the compressed air outlet line.

When Option F14 is selected, a KAESER FILTER KB is not required at the user-end.

## 6.4 Installation example

The following installation example is a suggestion only and does not relate to an actual application.

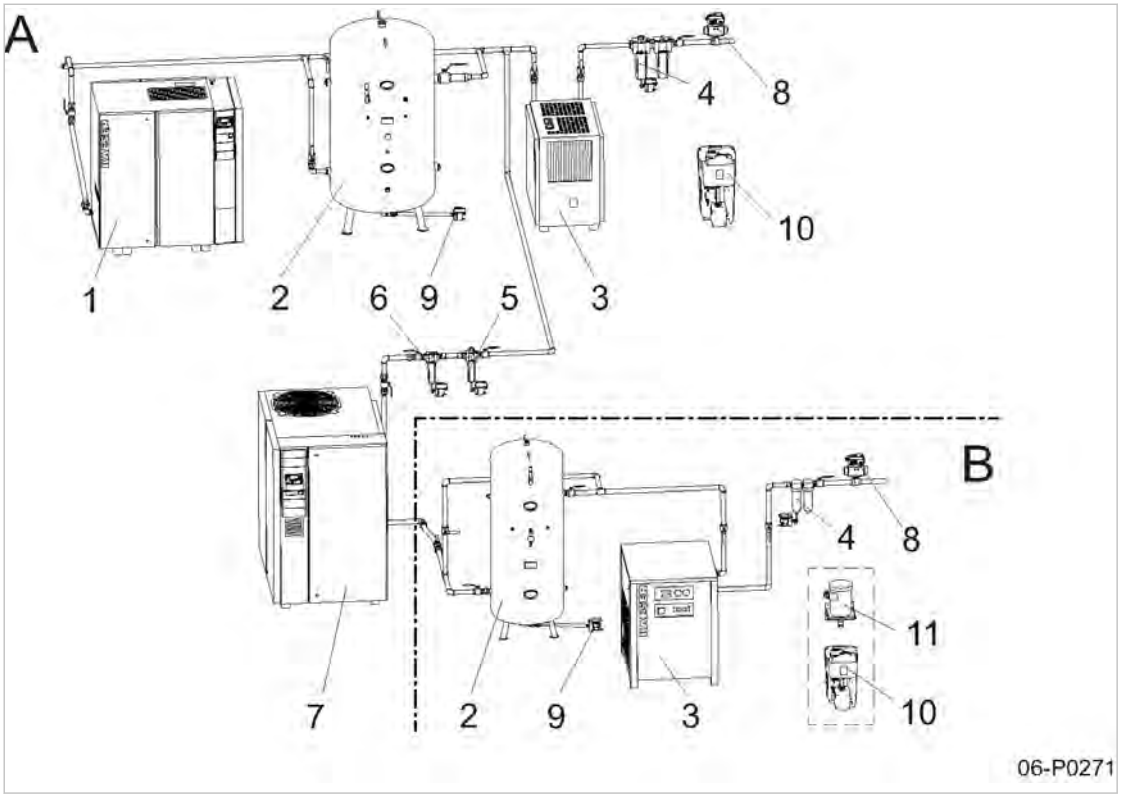


Fig. 21 Installation example (suggestion)

- A Low-pressure network
- B High-pressure network
- 1 Rotary screw compressor
- 2 Air receiver
- 3 Refrigerated dryer
- 4 KAESER FILTER, e.g. KE/KA
- 5 KAESER FILTER KC (Option)
- 6 KAESER FILTER KB
- 7 Booster
- 8 Air-main charging system
- 9 Condensate drain
- 10 Condensate treatment system
- 11 High-pressure relief chamber

## 6.5 Connecting the condensate drain

A threaded hose connection is provided for attaching a condensate line.

The condensate must be able to drain off freely.

➤ Only a condensate collection line with a minimum permissible gauge working pressure of 910 psi may be connected to the machine.

Fig. 22 depicts a recommended installation.
The condensate flows downwards in the collection line. This prevents condensate from flowing back into the machine.

If condensate flows into the condensate collection line at several points, you must install shut-off valves in the condensate lines so as to be able to shut off the lines before commencing any maintenance work.

### Condensate line

| Characteristic | Value |
|---|---|
| Max. length[1] [ft] | 50 |
| Max. delivery head [ft] | 16 |
| Material[2] (pressure-resistant, corrosion-proof) | Copper<br>Stainless steel<br>Hose line |

[1] For longer lengths, please contact the manufacturer before installation.

[2] Note the final pressure of the machine.

Tab. 39 Condensate line

### Condensate collection line

| Characteristic | Value |
|---|---|
| Gradient [%] | ≥3 |
| Max. length[1] [ft] | 65 |
| Material (pressure-resistant, corrosion-proof) | Copper<br>Stainless steel<br>Hose line |

[1] For longer lengths, please contact an authorized KAESER service representative before installation.

Tab. 40 Condensate collection line

| Compressed air flow rate[1] [cfm] | Line cross-section [“] |
|---|---|
| <350 | 3/4 |
| 350 – 700 | 1 |
| 701 – 1400 | 1 1/2 |
| >1400 | 2 |

[1] Use compressed air flow rate as a guide for the expected condensate volume

Tab. 41 Condensate collecting line: Line cross-section

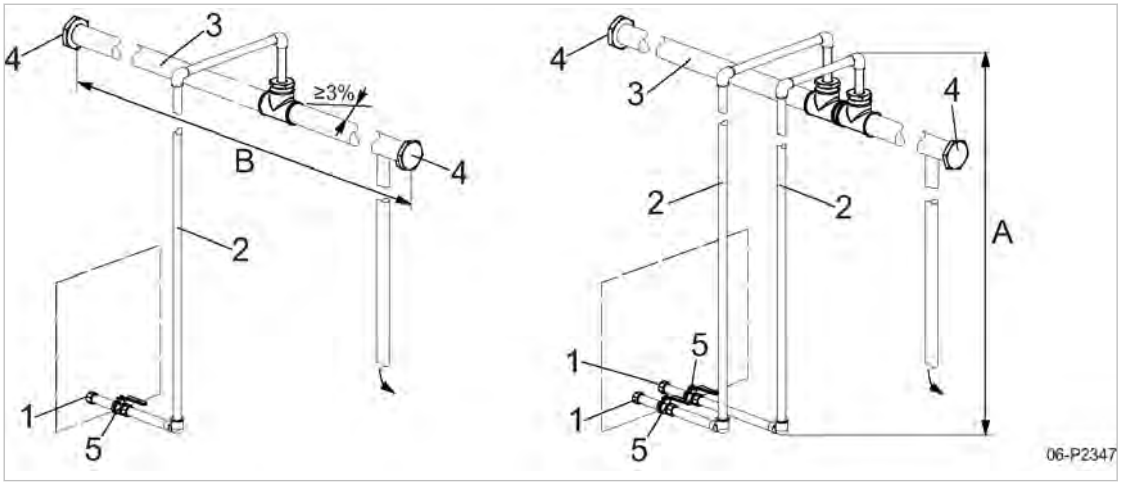


Fig. 22 Connecting the condensate drain

| | | | |
|---|---|---|---|
| 1 | Threaded connection | 5 | Shut-off valve |
| 2 | Condensate line | A | Delivery head |
| 3 | Condensate collection line | B | Length of condensate collection line |
| 4 | Screw plug | | |

Depending on the version of the machine, you may require multiple condensate drains.

➤ Connect each condensate drain directly to the condensate collection line.

➤ Collect the condensate in a suitable collection container and dispose of it in accordance with applicable environmental regulations.

Further information The size and position of the connection port can be found in the dimensional drawing provided in chapter 13.2.

## 6.6 Connecting the machine to a power supply network

Precondition The power supply disconnecting device is switched off,
lock out / tag out the device,
the absence of any voltage has been verified.

The tolerance limits of the power supply network are within the permissible tolerance limits of the rated machine voltage.

1. The power supply must only be established by authorized installation personnel or authorized, certified electricians.
2. Observe required safety measures as stipulated in the applicable regulations and in national accident prevention regulations. Also observe the regulations of the local electricity supplier.
3. Select supply cable cross-sections and overcurrent protective devices (backup fuses) in accordance with local regulations.
4. Test the overload protective device to ensure that the time it takes to disconnect in response to a fault is within the permitted limit.
5. The user is required to fit the machine with a lockable power supply disconnecting device in accordance with local regulations.
   This could be, for example, a load disconnecting switch with fused input. If a circuit breaker is used, it must be suitable for the applicable motor starting characteristics.

6. Check that the control voltage transformer connections are in accordance with the power supply.
   If necessary, reconnect the control transformer to suit the power supply.
7. **⚠ DANGER** *Danger of fatal injury from electric shock!*
   ➤ *Switch off and lock out / tag out the power supply disconnecting device and verify the absence of any voltage.*
8. Connect the machine to the power supply.

Further information The wiring diagram in chapter 13.3 contains further details regarding the electrical connection.

## 6.7 Options

### 6.7.1 Option H1 Anchoring the Machine

Fig. 23 Machine mountings

➤ Use appropriate fixing bolts to anchor the machine.

Further information Details of the fixing holes are contained in the dimensional drawing in chapter 13.2.

### 6.7.2 Option H4 Oil collection tray

Any leaks occurring at the machine are captured by the oil collection tray.

Precondition Installation site is level
Sufficient space for the assembly
Suitable hoisting gear

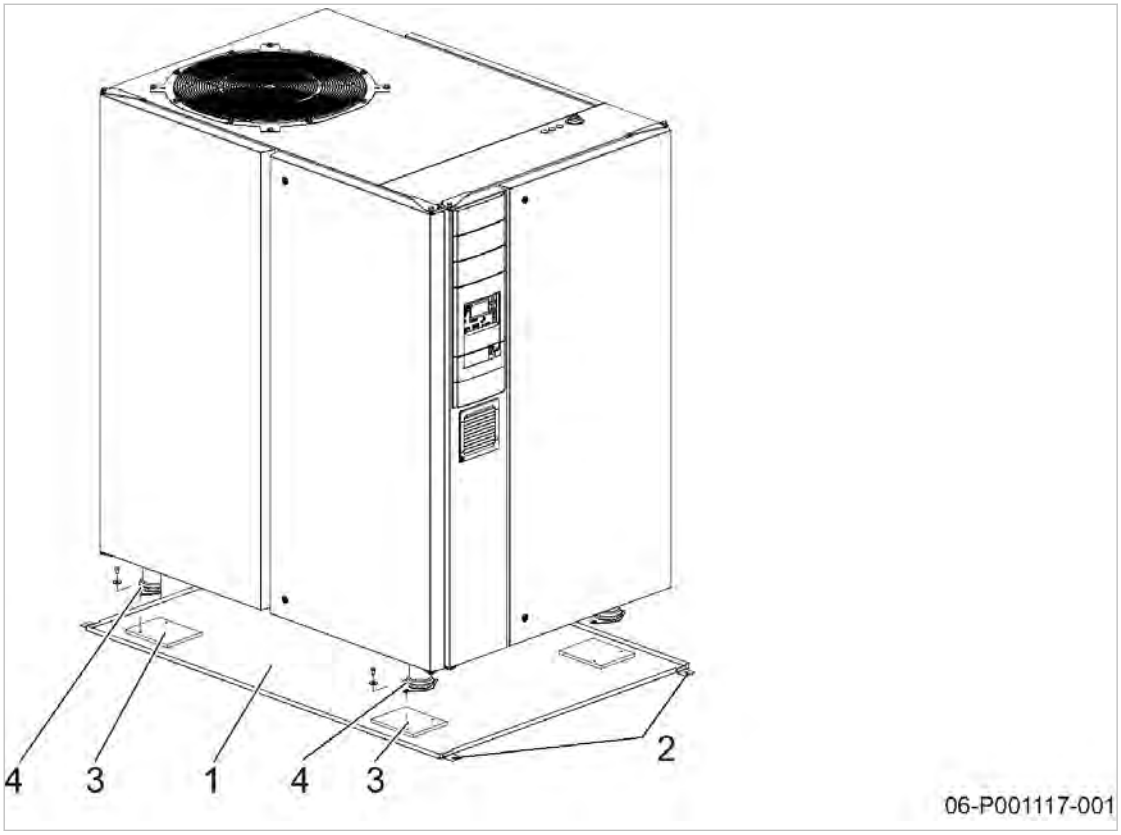


Fig. 24 Oil collection tray

| | | | |
|---|---|---|---|
| 1 | Oil collection tray | 3 | Support plate for mounting feet |
| 2 | Fixing points | 4 | Mounting feet |

- ➤ Horizontally align the oil collection tray on the ground and fasten at the fixing points.
- ➤ Use suitable hoisting gear to place the machine on the oil collection tray in such a manner that the mounting feet stand securely on the support plates.
- ➤ Screw the mounting feet onto the support plates.

### 6.7.3 Option K9 Connecting the cooling water

- ➤ Take the electrochemical series into consideration and choose suitable materials for water connections.
- ➤ Keep the effect of pressure surge on the heat exchanger as low as possible.
- ➤ Install an expansion tank to act as a pulsation dampener if pressure surges cannot be avoided.
- ➤ Avoid a low inlet temperature for the cooling water as it can cause condensation. If required, contact an authorized KAESER service representative for suitable insulation measures.

Temperature-controlled cooling water supply systems, to which numerous machines are connected, regulate water volumetric flow rate according to the difference in temperature between the supply and the return water. Individual machines may not receive an adequate volumetric flow under this system. Breakdowns are the result.

➤ KAESER can advise on how to ensure the cooling water supply via suitable control valves.

Fig. 25 Connecting the cooling water

| | | | |
|---|---|---|---|
| A | Cooling water outlet | 12 | Connection port with plug |
| B | Cooling water inlet | 17 | Safety relief valve |
| 10 | Shut-off valve | | |

1. The user is to provide the following fittings:
   - Dirt traps (grid size according to permissible particle size.
   - Shut-off valves 10 and connection ports 12 for maintenance and venting.
   - Safety relief valve 17 to prevent build-up of excessive pressure.
     Actuating pressure and blow-off capacity of the safety valve are governed by the user's installation design. The technical specification of the cooler and the machine must be taken into consideration.
2. Connect the cooling water lines to the fittings.
3. Open the shut-off valve on the cooling water outlet A.
4. Slowly open the cooling water inlet shut-off valve B to gradually fill the cooler with water.
5. Bleed air from the water lines.

Further information The dimensional drawing in chapter 13.2 gives the flow direction, size and position of the connection ports.

# 7 Initial Start-up

## 7.1 Ensuring safety

Here you will find instructions for a safe commissioning of the machine.
Warning instructions are located before a potentially dangerous task.

⚠ Disregard of warning instructions can cause serious injuries!

### Complying with safety warnings

Disregard of safety warnings can cause unforeseeable dangers!

- ➤ Follow the instructions in chapter 3 “Safety and responsibility”.
- ➤ Installation work may only be carried out by authorized personnel.
- ➤ Make sure that no one is working on the machine.
- ➤ Ensure that all service doors and panels are locked.

### Working on live components

Touching voltage carrying components can result in electric shocks, burns or death.

- ➤ Work on electrical equipment may only be carried out by authorized electricians.
- ➤ Switch off and lock out the power supply disconnecting device and check that no voltage is present.
- ➤ Check that the floating relay contacts are voltage-free.

### Working on the compressed air system

Compressed air is contained energy. Uncontrolled release of this energy can cause serious injury or death. The following safety concerns relate to any work on components that could be under pressure.

- ➤ Isolate the machine from the air main by closing the user's compressed air inlet and outlet shut-off valves.
- ➤ Depressurize all pressurized components and enclosures (see chapter 10.13).
- ➤ Do not open or dismantle any valves.

### Working on the drive system

Touching voltage carrying components can result in electric shocks, burns or death.
Touching the fan while the machine is running can result in serious injury.

- ➤ Switch off and lock out the power supply disconnecting device and check that no voltage is present.
- ➤ Do not open the cabinet while the machine is switched on.

Further information

Details of authorized personnel are found in chapter 3.4.2.
Details of dangers and their avoidance are found in chapter 3.5.

## 7.2 Instructions to be observed before commissioning

Incorrect or improper commissioning can cause injury to persons and damage to the machine.

➤ Commissioning may be carried out only by authorized installation and service personnel who have been trained on this machine.

**Special measures for re-commissioning after storage/standstill**

| Storage period/ standstill longer than | Measure |
|---|---|
| 12 months | ➤ Change the compressor oil. |
| 36 months | ➤ Have the overall technical condition checked by an authorized KAESER service representative. |

Tab. 42 Re-commissioning after storage/standstill

## 7.3 Checking installation and operating conditions

➤ Check and confirm all the items on the checklist before commissioning the machine:

| Check: | See chapter | Confirmed? |
|---|---|---|
| ➤ Are the operators completely familiar with the applicable safety regulations? | – | |
| ➤ Have all of the installation conditions been fulfilled? | 5 | |
| ➤ Has a lockable power supply disconnecting device been installed at the user-end? | 6.6 | |
| ➤ Are the tolerance limits of the power supply network within the permissible tolerance limits of the rated machine voltage? (See nameplate in the control cabinet) | 2.1 | |
| ➤ Are the cable cross-sections and fuse ratings sufficient? | 2.15.1 | |
| ➤ Is the compressor motor overload relay appropriate for the power supply? | 7.4 | |
| ➤ Is the fan motor protection switch appropriate for the power supply? | 7.4 | |
| ➤ Have all electrical connections been checked for tightness?<br>➤ Has the inspection been repeated after 50 operating hours following the initial commissioning? | – | |
| ➤ Have the connections to the low-pressure network and high-pressure network been established using a shut-off valve and flexible pressure line? | 6.3 | |
| ➤ Has the belt tension been checked?<br>➤ Has it been rechecked after 24 operating hours following the initial commissioning? | 10.25 | |
| ➤ Is there sufficient oil in the compressor block housing? (With the machine switched off, the oil level should be 0.2 – 0.3 inches above the red zone on the oil sight glass) | 10.14 | |
| ➤ Has an external condensate line been connected? | – | |
| ➤ Has it been verified that no other compressed air components are located in the hot exhaust air flow exiting the machine? | 5.2.3 | |

| Check: | See chapter | Confirmed? |
|---|---|---|
| ➤ Is the machine firmly anchored to the floor without stress? (Option H1) | 6.7.1 | |
| ➤ Is there a guaranteed supply of cooling water? (Option K9) | 6.7.3 | |
| ➤ Has the door limit switch been aligned and its function checked? | 7.8 | |
| ➤ Are all maintenance doors closed and all removable panels secured in place? | – | |

Tab. 43 Checklist for installation conditions

## 7.4 Setting the overload protection relay

Electrical diagram 13.3 gives the location of the overload relay.

With star-delta starting, the phase current is fed via the overload protection relay. This phase current is 0.58-times the rated motor current.

To prevent the overload relay being triggered by voltage fluctuations, temperature influences or component tolerances, the setting can be higher than the arithmetical phase current.

➤ Check the overload protection relay setting.

The overload protection relay shuts the machine down despite being correctly set?

➤ Contact an authorized KAESER service representative.

## 7.5 Checking the motor protection switch settings

Electrical diagram in chapter 13.3 gives the setting values for the motor overload protection switch.

In direct on-line starting, the current for the fan motor is fed via the motor overload protection switch.

To prevent the motor overload protection switch from being triggered by voltage fluctuations, temperature influences or component tolerances, the setting can be higher than the rated motor current.

➤ Check the motor overload protection switch setting.

The overload protection switch shuts the machine down despite being correctly set?

➤ Contact an authorized KAESER service representative.

## 7.6 Starting the machine for the first time

Precondition No personnel are working on the machine.
All access doors are closed.
All removable panels in place and secured.

1. Open the shut-off valve to the air network.
2. Switch on the power supply disconnecting device.
   After the controller has carried out a self-test, the green *Control voltage* LED is lit continuously.

3. If required:
   Change the display language as described in chapter 7.9.
4. Press the «ON» key.
   The compressor motor runs up and after a short time the machine switches to LOAD and delivers compressed air.

- ➤ Watch for any faults occurring in the first hour of operation.
- ➤ After the first 50 operating hours, check all electrical connections and tighten where necessary.

Does the machine stop when the compressor motor rotates in the wrong direction?

- ➤ Switch off and lock out the power supply disconnecting device and check that no voltage is present.
- ➤ Changeover phase lines L1 and L2.
- ➤ Acknowledge any existing alarm messages and switches the machine on again.

## 7.7 Setting the set point pressure

The system pressure is factory set to the highest possible value.

Adjustment is necessary for individual operating conditions.

Do not set the set point pressure of the machine higher than the maximum working pressure of the compressed air system.

The machine may not toggle more than twice per minute between LOAD and IDLE.

To reduce the cycling (toggling) frequency:

- ➤ Increase the difference between cut-in and cut-out pressure.
- ➤ Add a larger air receiver downstream to increase buffer capacity.

➤ Set the set point pressure as described in the SIGMA CONTROL 2 operating manual.

## 7.8 Checking the door interlock switch

The interlock switch stops the machine as soon as the panel is opened.
Check the interlock switch function when commissioning or re-commissioning the machine.

The door interlock switch is an important safety device.
The machine may only be operated with a correctly functioning interlock switch.

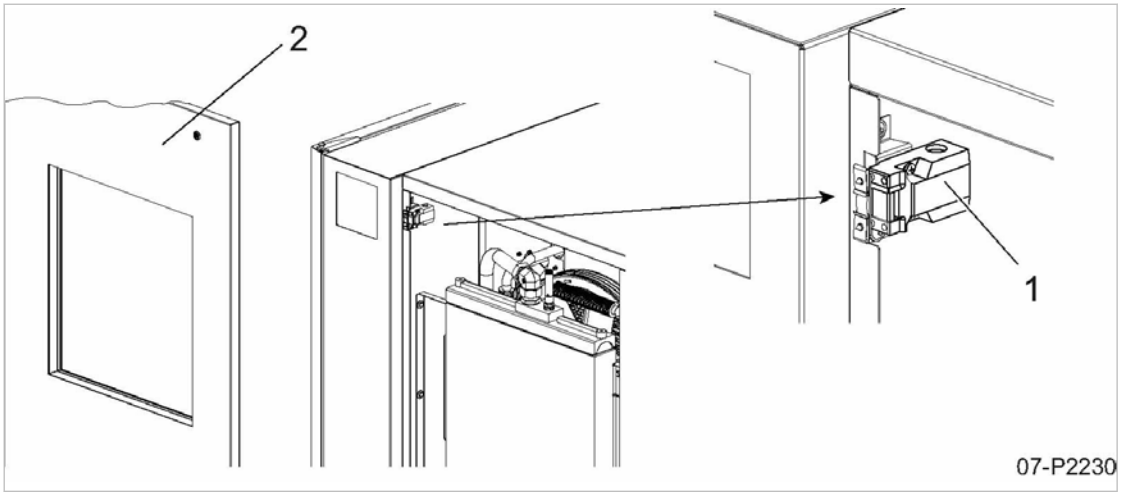


Fig. 26 Position of the door interlock switch

1 Door interlock switch
2 Removable panel

1. Open the access panel 2 after switching on the machine.
   The machine shuts down automatically. The controller displays an alarm message.
2. Close the panel and acknowledge the alarm.

The machine does not shut down?

➤ Have the interlock switch checked by an authorized KAESER service representative.

## 7.9 Setting the display language

The controller can display text messages in several languages.

You can set the language for texts on the display. This setting will be retained even when the machine is switched off.

1. In operating mode, switch to the main menu with the «Return» key.
2. Press the «UP» or «DOWN» keys until the current language is shown as active line (inverse):

| | |
|---|---|
| 145 psig 176.0 °F 505 psig | |
| ——— EN English ——— | Current language (active line) |
| ▸1 xxxxxxxxxx | Submenu |
| ▸2 xxxxxxxxxx | Submenu |
| ▸3 xxxxxxxxxx | Submenu |
| ▸4 xxxxxxxxxx | Submenu |
| ▸5 xxxxxxxxxx | Submenu |
| ▸6 xxxxxxxxxx | Submenu |

3. Use the «Return» key to switch to setting mode.
   The language display flashes.
4. Move to the required language with «UP »or «DOWN».
5. Confirm the setting with the «Enter» key.
6. Press «Escape» repeatedly to return to the main menu.

| | |
|---|---|
| Result | The display texts are now in the selected language. |
| Further information | Detailed information can be found in the SIGMA CONTROL 2 service manual. |

# 8 Operation

## 8.1 Switching on and off

Always switch the machine on with the «ON» key and off with the «OFF» key.

A power supply disconnecting device has been installed by the user.

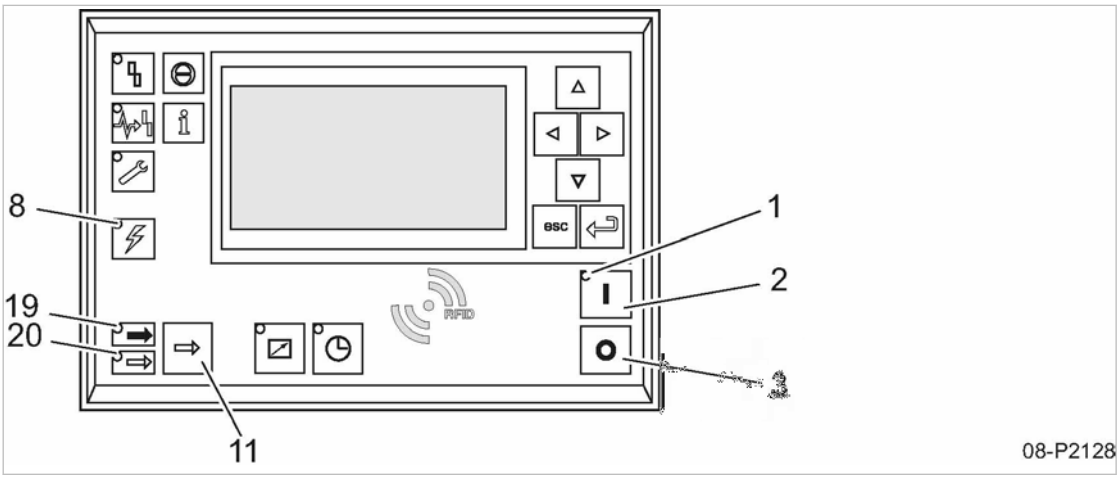


Fig. 27 Switching on and off

1 *Machine ON* LED
2 «ON» key
3 «OFF» key
8 *Controller voltage* LED
11 «LOAD/IDLE» toggle key
19 *LOAD* LED
20 *IDLE* LED

### 8.1.1 Switching on

Precondition No personnel are working on the machine.

All access doors and panels are closed and secure.

1. Switch on the power supply disconnecting device.

   The *Controller voltage* LED lights green.
2. Press the «ON» key.

   The *ON* LED lights green.

If a power failure occurs, the machine is **not** prevented from re-starting automatically when power is resumed.
It can re-start automatically as soon as power is restored.

Result The compressor motor starts as soon as system pressure is lower than the setpoint pressure (cut-off pressure).

### 8.1.2 Switching off

1. Press the «OFF» key.

   The machine switches to IDLE and the *IDLE* LED flashes. The SIGMA CONTROL 2 displays *Stopping*. The *ON* LED extinguishes as soon as the automatic shut-off action is completed.
2. Switch off and lock out the power supply disconnecting device.

Result The *Controller voltage* LED extinguishes. The machine is switched off and disconnected from the power supply.

In rare cases, you may want to shut down the machine immediately and cannot wait until the automatic shut-down process is finished.

➤ Press «OFF» once again.

## 8.2 Switching off in an emergency and switching on again

The EMERGENCY STOP push-button is located below the control panel.

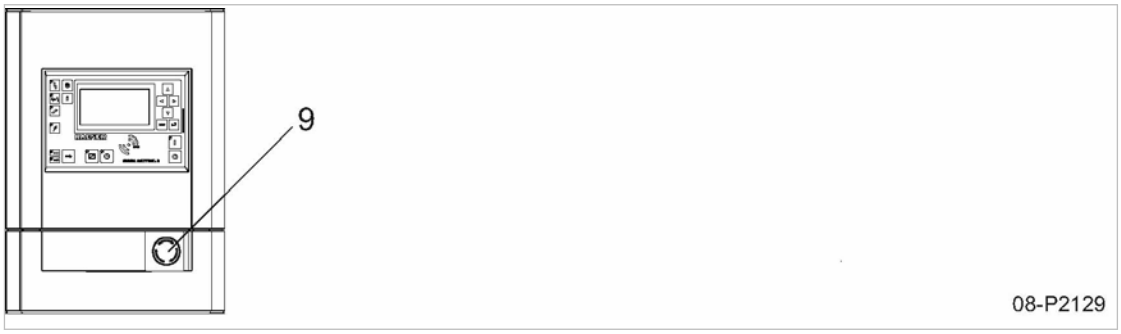


Fig. 28 Switching off in an emergency

9 EMERGENCY STOP push button

### Switching off

➤ EMERGENCY STOP push button actuated.

Result The EMERGENCY STOP device remains latched after actuation.

The compressor's pressure system is vented and the machine is prevented from automatically re-starting.

### Switching on

Precondition The fault has been rectified

1. Turn the EMERGENCY STOP push button in the direction of the arrow to unlatch it.
2. Acknowledge any existing alarm messages.

Result The machine can now be started again.

## 8.3 Using the remote control for switching on and off

Precondition A link to the remote control center exists.

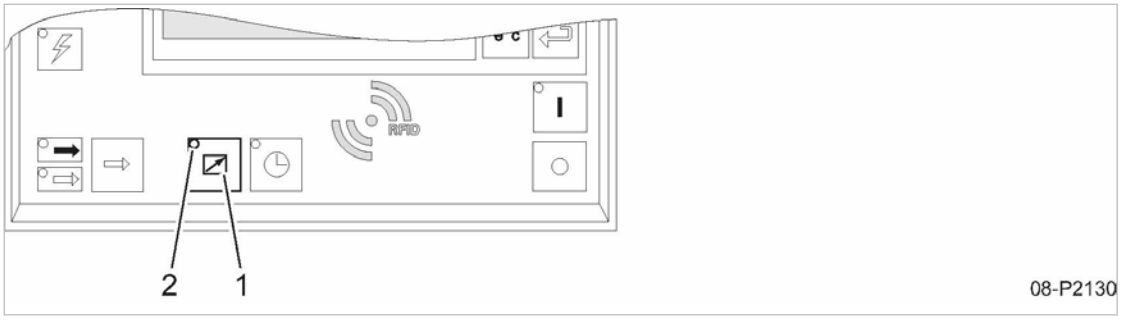


Fig. 29 Using the remote control for switching on and off

1 «Remote control» key
2 *Remote control* LED

1. Attach an easily seen notice to the machine that warns of remote operation.

**⚠ WARNING**

Remote control: Risk of injury caused by unexpected starting!

➤ Make sure that the power supply disconnecting device is switched off before commencing any work on the machine.

Tab. 44 Machine identification

2. Label the starting device in the remote control center as follows:

**⚠ WARNING**

Remote control: Risk of injury caused by unexpected starting!

➤ Before starting, make sure that no one is working on the machine and that it can be safely started.

Tab. 45 Remote control identification

3. Press the «Remote control» key.

   The *remote control* LED lights. The machine can be remotely controlled.

## 8.4 Switching on and off with the clock

Precondition The clock is programmed.

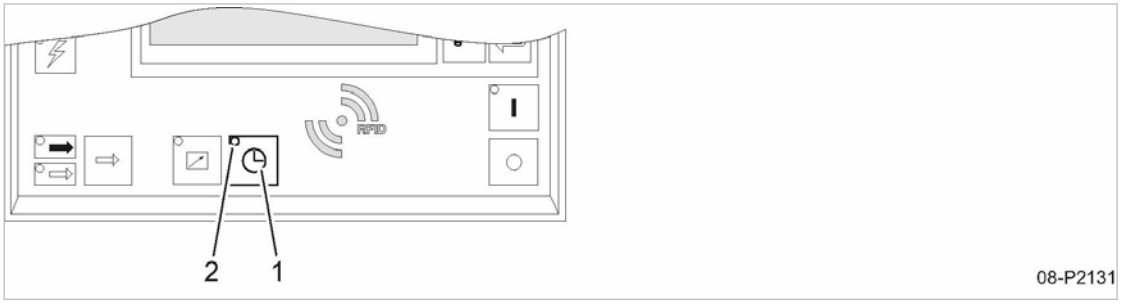


Fig. 30 Switching on and off with the clock

1 «Clock» key
2 *Clock* LED

1. Attach an easily seen notice warning of time-controlled operation:

**⚠ WARNING**

Clock control: danger of unexpected starting!

➤ Make sure that the power supply disconnecting device is switched off before commencing any work on the machine.

Tab. 46 Machine identification

2. Press the «clock» key.
   The *clock* LED lights. The machine is switched on and off by the clock.

## 8.5 Interpreting operation messages

The controller will automatically display operation messages informing you about the current operational state of the machine.

Operating messages are identified with the letter B.

Further information Detailed information can be found in the SIGMA CONTROL 2 operating manual.

## 8.6 Acknowledging alarm and warning messages

Messages are displayed on the "new value" principle:

- Message coming: LED flashes
- Message acknowledged: LED illuminates
- Message going: LED off

or

- Message coming: LED flashes
- Message going: LED flashes
- Message acknowledged: LED off

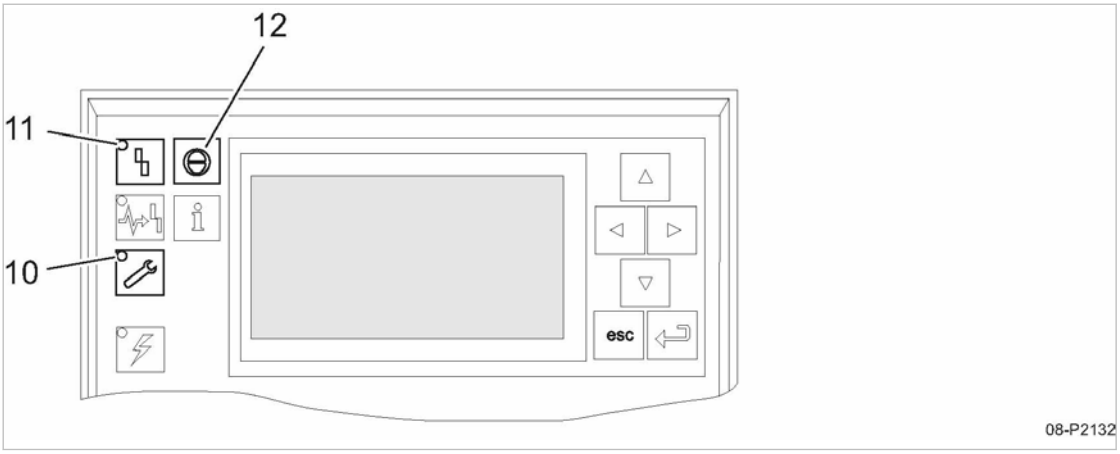


Fig. 31 Acknowledging messages

(10) *Warning* LED (yellow)
(11) *Alarm* LED (red)
(12) Key «Acknowledge»

### Alarm message

An alarm shuts the machine down automatically. The red *alarm* LED flashes.

The system displays the appropriate message.

Precondition The fault has been rectified

➤ Acknowledge the message with the «acknowledge» key.

*Alarm* LED extinguishes.

The machine is again ready for operation.

If the machine was switched off with the EMERGENCY STOP push button:

➤ Unlatch the EMERGENCY STOP push button (turn in direction of the arrow) before acknowledging the alarm message.

Further information A list of possible alarm messages occurring during operation can be found in the service manual SIGMA CONTROL 2.

### Warning message

If maintenance work is to be carried out or if the warning is displayed before an alarm, the yellow *warning* LED flashes.

The system displays the appropriate message.

Precondition The danger of an alarm is passed,
maintenance has been carried out.

➤ Acknowledge the message with the «Acknowledge» key.

The *warning* LED extinguishes.

Further information A list of possible alarm messages occurring during operation can be found in the service manual SIGMA CONTROL 2.

# 9 Fault Recognition and Rectification

## 9.1 Basic instructions

There are 3 types of fault:

- Warning:
  - Warning messages *W*
- Fault (with indication):
  - Alarm messages *S*
  - System messages *Y*
  - Diagnostic messages *D*
- Other faults (without indication): See chapter 9.2

The messages valid for your machine are dependent on how the individual machine is equipped.

1. Do not attempt fault rectification measures other than those given in this manual!
2. In all other cases:
   Have the fault rectified by an authorized KAESER service representative.

Further information

Detailed information for the various messages can be found in the service manual SIGMA CONTROL 2.

## 9.2 Other faults

| Fault | Possible cause | Remedy |
|---|---|---|
| Machine runs but produces no compressed air. | Inlet valve not opening or only opening partially. | Contact an authorized KAESER service representative. |
| | Venting valve not closing. | Contact an authorized KAESER service representative. |
| | Leaks in the pressure system. | Check pipework and connections for leaks and tighten any loose connections. |
| | Compressed air demand exceeds the volumetric flow rate from the compressor. | Check the air system for leaks.<br>Shut down consumer(s). |
| Compressor switches between LOAD and IDLE more than twice per minute. | Air receiver too small. | Increase size of receiver. |
| | Airflow into the compressed air network restricted. | Increase air pipe diameters.<br>Checking the filter elements. |
| | The differential between cut-in and cut-out pressure too is small. | Check switching differential. |

| Fault | Possible cause | Remedy |
|---|---|---|
| Cooling oil leaking into the machine. | Hose coupling or maintenance hose still plugged into the quick-release coupling on the compressor block.<br>Ball valve at the compressor block is not closed. | Remove the hose coupling/ maintenance hose.<br>Close the ball valve. |
| | Oil pump leaking. | Contact an authorized KAESER service representative. |
| | Leaking pipe joints. | Tighten pipe joints.<br>Replace seals. |
| Compressor oil consumption too high. | Unsuitable compressor oil. | Use prescribed compressor oils. |
| | Piston rings worn or broken. | Contact an authorized KAESER service representative. |
| | Micro-filter element in the crankcase venting contaminated. | Renew the micro-filter element in the crankcase venting. |

Tab. 47 Other faults and remedies

## 9.3 Electronic condensate drain alarm function

When the machine is equipped with both Option F14 and Option K6, two electronic condensate drains are installed.

Both electronic condensate drains are equipped with an alarm message contact. In the event of a fault, they can transmit a signal by means of a floating contact. The floating contacts for each electronic condensate drain are connected to the controller together.

### Condensate drain warning/alarm message

Precondition A warning or alarm message is issued for the condensate drain.

1. Check on which of the two electronic condensate drains the alarm function has been activated (*Alarm* LED flashes when alarm function is active).

2. Undertake corrective measures on the corresponding condensate drain.

| Message | Possible cause | Action |
|---|---|---|
| 0068<br>Condensate drain | Condensate drain faulty / not ready. | Check condensate drain and condensate lines. |
| | Too much accumulated condensate. | Check the lines. |
| | Line broken/disconnected. | Check the ECO-DRAIN. |
| | Condensate cannot be drained. | Check the inlet conditions. |

Tab. 48 Condensate drain alarm message

Further information

A list of all warning and alarm messages can be found in the SIGMA CONTROL 2 operating manual.

Operating instructions for the electronic condensate drains can be found in chapter 13.6.

# 10 Maintenance

## 10.1 Ensuring safety

Follow the instructions below to ensure safe machine maintenance.

Warning instructions are located before a potentially dangerous task.

⚠ Disregard of warning instructions can cause serious injuries!

### Complying with safety notes

Disregard of safety notes can cause unforeseeable dangers!

- ➤ Follow the instructions in chapter 3 “Safety and Responsibility”.
- ➤ Maintenance work may only be carried out by authorized personnel.
- ➤ Use one of the safety signs below to advise others that the machine is currently being serviced:

| Sign | Meaning |
|---|---|
| | Don't activate the machine. |
| | Warning:<br>The machine is being serviced. |

Tab. 49 Warn others that the machine is being serviced.

- ➤ Before switching on, make sure that nobody is working on the machine and all access doors and panels are closed.

### Working on live components

Touching voltage carrying components can result in electric shocks, burns or death.

- ➤ Work on electrical equipment may only be carried out by authorized electricians.
- ➤ Switch off and lock out the power supply disconnecting device and check that no voltage is present.
- ➤ Check that there is no voltage on floating-relay contacts.

### Working on the compressed air system

Compressed air is contained energy. Uncontrolled release of this energy can cause serious injury or death. The following safety concerns relate to any work on components that could be under pressure.

- ➤ Isolate the machine from the air main by closing the user's compressed air inlet and outlet shut-off valves.
- ➤ Depressurize all pressurized components and enclosures (see chapter 10.13).
- ➤ Do not open or dismantle any valves.

**Working on the drive system**

Touching voltage carrying components can result in electric shocks, burns or death.
Touching the fan wheel, the coupling or the belt drive while the machine is switched on can result in serious injury.

- ➤ Switch off and lock out the power supply disconnecting device and check that no voltage is present.
- ➤ Do not open the cabinet while the machine is switched on.

Further information Details of authorized personnel are found in chapter 3.4.2.
Details of dangers and their avoidance are found in chapter 3.5.

## 10.2 Following the maintenance plan

### 10.2.1 Logging maintenance work

The maintenance intervals given are those recommended for KAESER original components with average operating conditions.

- ➤ In adverse conditions, perform maintenance work at shorter intervals.

Adverse conditions are, e.g.:

- high temperatures
- much dust
- high number of load changes
- low load

- ➤ Adjust the maintenance intervals with regard to local installation and operating conditions.

- ➤ Document all maintenance and service work.
  This enables the frequency of individual maintenance tasks and deviations from our recommendations to be determined.

Further information A list is given in chapter 10.27.

### 10.2.2 Resetting maintenance interval counters

According to the way a machine is equipped, sensors and/or maintenance interval counters monitor the operational state of important functional devices. Required maintenance work is shown on SIGMA CONTROL 2.

Precondition Maintenance performed and
maintenance message acknowledged.

- ➤ Reset the maintenance interval counter as described in the SIGMA CONTROL 2 operating manual.

### 10.2.3 Regular maintenance and service work

The following table provides an overview of the various maintenance intervals for the machine.

Selected maintenance intervals for the machine can be displayed via the SIGMA CONTROL 2 controller.

| Maintenance interval | Short description |
|---|---|
| Weekly | Week |
| Yearly | Year |
| SIGMA CONTROL 2: Maintenance package A<br>(Every 1000 operating hours; at least every 1 years) | Package A |
| SIGMA CONTROL 2: Maintenance package B<br>(Every 2000 operating hours; at least every 2 years) | Package B |
| SIGMA CONTROL 2: Maintenance package C<br>(Every 12000 operating hours; at least every 6 years) | Package C |
| SIGMA CONTROL 2: Maintenance package D<br>(Every 24000 operating hours; at least every 12 years) | Package D |
| SIGMA CONTROL 2: Belt inspection<br>(Every 500 operating hours) | Belt |
| SIGMA CONTROL 2: Hose lines<br>(Every 24000 operating hours; Interval dependent on the number of load changes for the machine) | Lines |
| SIGMA CONTROL 2: Air cooler<br>(Interval dependent on the number of load changes for the machine) | Cooler |
| SIGMA CONTROL 2: Electrical system<br>(Every 9000 operating hours) | Electrical system |
| At least after 20 years | 20 years |

Tab. 50 Maintenance intervals, regular maintenance and service work

The following table gives an overview of the regular maintenance and service work required.

1. Maintenance and service work should be carried out in a timely manner, taking local ambient and operating conditions into account.
2. Replace maintenance parts and operating fluids in accordance with their respective service lives.

#### 10.2.3.1 Machine maintenance and service schedule

➤ Tasks indicated with “KS” may only be carried out by an authorized KAESER service representative.

➤ Carry out maintenance and service work in accordance with the following table and at the times specified:

| Task | Week | Year | Package A | Package B | Package C | Package D | Belt | Lines | Cooler | Electrical system | 20 years | See Chapter | Note |
|---|---|---|---|---|---|---|---|---|---|---|---|---|---|
| **Safety functions:** | | | | | | | | | | | | | |

KS = Contact KAESER SERVICE; CE = Contact certified electrician

[1] Adjust interval as necessary, see Table 52.

[2] Interval dependent on the number of load changes for the machine.

| Task | Week | Year | Package A | Package B | Package C | Package D | Belt | Lines | Cooler | Electrical system | 20 years | See Chapter | Note |
|---|---|---|---|---|---|---|---|---|---|---|---|---|---|
| Check the safety shutdown function for when the machine is opened. | | X | | | | | | | | | | 7.8 | |
| Check the safety relief valve. | | X | | | | | | | | | | 10.9 | |
| Check the excess temperature safety shutdown function. | | X | | | | | | | | | | 10.10 | |
| Check the EMERGENCY STOP push button. | | X | | | | | | | | | | 10.11 | |
| Check the temperature shut-down function on the com-pressed air inlet cooler. | | X | | | | | | | | | | 10.12 | |
| Replace safety-relevant compo-nents for safety functions. | | | | | | | | | | | X | — | KS |
| **Air filter:** | | | | | | | | | | | | | |
| Clean or replace the filter mat. | | | X | X | X | X | | | | | | 10.3 | |
| Service the air filter. | | | | X | X | X | | | | | | 10.4 | |
| **Compressor block:** | | | | | | | | | | | | | |
| Check the compressor oil level. | X | | | | | | | | | | | 10.14 | |
| Change the compressor oil[1]. | | | | X | X | X | | | | | | 10.16 | |
| Replace the oil filter. | | | | X | X | X | | | | | | 10.18 | |
| Service the dirt trap. | | | X | X | X | X | | | | | | 10.19 | |
| Crankcase ventilation: Replace the filter element. | | | | X | X | X | | | | | | 10.17 | |
| Replace the hydraulic bearing. | | | | | | X | | | | | | — | KS |
| **Motor and bearings:** | | | | | | | | | | | | | |
| Service the motor anti-friction bearing. | | | | X | X | X | | | | | | 10.8 | |
| Check the drive belt tension. | | | | | | | X | | | | | 10.25 | |
| Replace the drive belt. | | | | | X | X | | | | | | — | KS |
| Replace the fan motor. | | | | | | X | | | | | | — | KS |
| **Valves:** | | | | | | | | | | | | | |
| Service the Idle mode check valve. | | | | X | X | X | | | | | | 10.20.1 | |
| Replace the solenoid valve. | | | | X | X | X | | | | | | 10.21 | |
| Replace the safety relief valve. | | | | X | X | X | | | | | | — | KS |

KS = Contact KAESER SERVICE; CE = Contact certified electrician

[1] Adjust interval as necessary, see Table 52.

[2] Interval dependent on the number of load changes for the machine.

| Task | Week | Year | Package A | Package B | Package C | Package D | Belt | Lines | Cooler | Electrical system 20 years | See Chapter | Note |
|---|---|---|---|---|---|---|---|---|---|---|---|---|
| Service the control valve. | | | | X | X | X | | | | | — | KS |
| Service the inlet valve. | | | | | X | X | | | | | — | KS |
| Service the venting valve. | | | | | X | X | | | | | — | KS |
| Venting line:<br>Replace the filter element. | | | | | X | X | | | | | — | KS |
| **Heat exchanger:** | | | | | | | | | | | | |
| Option K1:<br>Check the cooler for leaks. | | X | | | | | | | | | 10.5 | |
| Option K9:<br>Check the water-cooler for leaks. | | X | | | | | | | | | 10.7 | |
| Option K1:<br>Replace the cooler[2]. | | | | | | | | | X | | 10.6 | KS |
| **Pipe and hose lines:** | | | | | | | | | | | | |
| Replace the hose lines[2]. | | | | | X | X | | X | | | — | KS |
| Replace the control lines[2]. | | | | | X | X | | X | | | — | KS |
| **Electrical connections:** | | | | | | | | | | | | |
| Check that all electrical and screw connections are sufficiently tightened. | | X | | | | | | | | X | — | KS; CE |
| **Options:** | | | | | | | | | | | | |
| Option F14:<br>Check the electronic condensate drain. | X | | | | | | | | | | 10.22.1 | |
| Option F14:<br>Replace the service unit. | | | X | X | X | X | | | | | 10.22.2 | |
| Option F14:<br>Replace the filter element. | | | X | X | X | X | | | | | 10.23 | |
| Option K6:<br>Check the electronic condensate drain. | X | | | | | | | | | | 10.24.1 | |
| Option K6:<br>Service the electronic condensate drain. | | | X | X | X | X | | | | | — | KS |

KS = Contact KAESER SERVICE; CE = Contact certified electrician

[1] Adjust interval as necessary, see Table 52.

[2] Interval dependent on the number of load changes for the machine.

Tab. 51 Regular machine maintenance and service schedule

#### 10.2.3.2 Compressor oil: Change interval

Duty cycles and ambient conditions are important factors influencing the number and length of the oil change intervals.

Advice can be obtained from an authorized KAESER service representative regarding suitable oil change intervals.

➤ Check operating conditions and adjust intervals as necessary; log the results in table 52 for future reference.

| | Maximum permissible oil change interval [operating hours/years] | |
|---|---|---|
| Compressor oil | Favorable operating conditions [1] | My operating conditions |
| VDL 150 | 2000/1 | |
| FGP | 2000/1 | |

[1] Cool to moderate ambient temperatures, low humidity, moderate to high duty cycle.

Tab. 52 Compressor oil: Change intervals

## 10.3 Control cabinet: Clean or renew the filter mat

A filter mat is placed behind every ventilation grille. Filter mats protect the control cabinet from ingress of dirt. If the filter mats are clogged, adequate cooling of the components is no longer ensured. In such a case, clean or replace the filter mats.

Material Warm water and household detergent

Spare parts (as required)

Precondition The power supply disconnecting device is switched off,
the device is locked off,
the absence of any voltage has been verified.

The machine has cooled down.

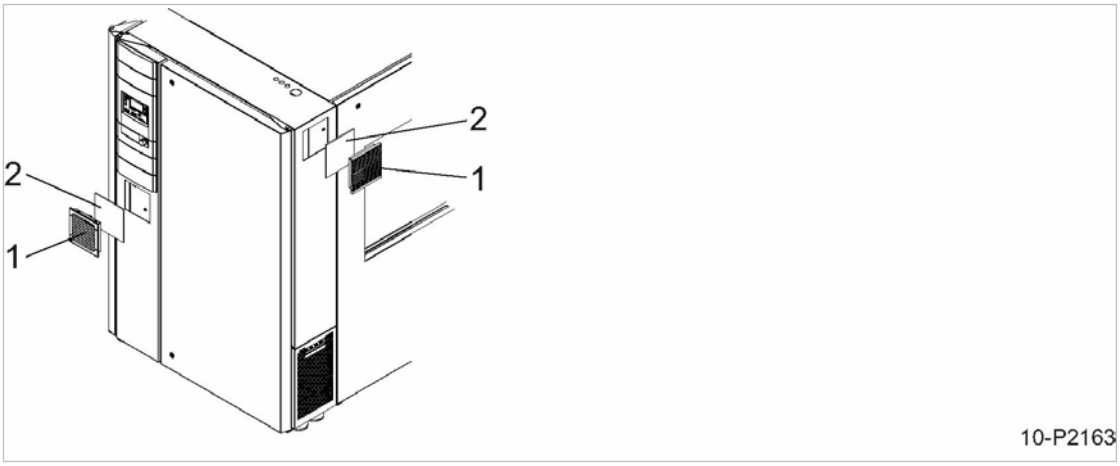


Fig. 32 Switching cabinet ventilation

1 Ventilation grill
2 Filter mat

1. Carefully remove the ventilation grill and take out the filter mat.
2. Beat the mat or use a vacuum cleaner to remove loose dirt. If necessary, wash with lukewarm water and household detergent.
3. Change the filter mat if cleaning is not possible or if the change interval has expired.
4. Lay the filter mat in the frame and latch in the ventilation grill.

## 10.4 Air filter maintenance

Check that all sealing surfaces are matching. The use of an unsuitable air filter can permit dirt to enter the pressure system and cause damage to the machine.

Material Air filter

Precondition The power supply disconnecting device is switched off,
lock out / tag out the device,
the absence of any voltage has been verified.

The machine has cooled down.

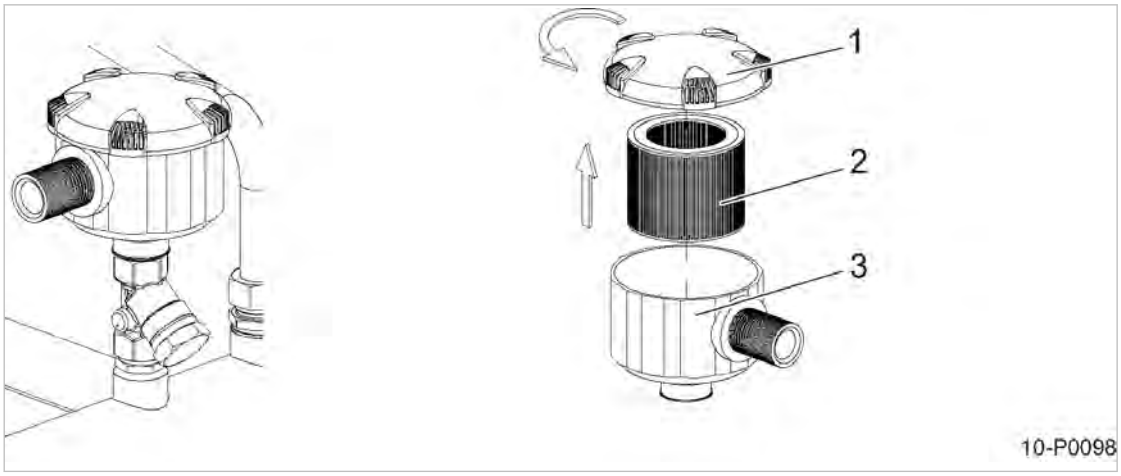


Fig. 33 Air filter maintenance

1 Cover
2 Air filter
3 Air filter housing

### Replacing the air filter

1. Unscrew and remove the cover.
2. Remove the used air filter and dispose of it in accordance with environmental protection regulations.
3. Clean the air filter housing and sealing surfaces.
4. Insert the new air filter.
5. Replace the cover and screw down tight.
6. Switch on the power supply disconnecting device and reset the maintenance counter.

## 10.5 Option K1 Cooler maintenance

Regularly clean the cooler. This ensures reliable cooling of the machine and the compressed air. The frequency is mainly dependent on local operating conditions.

A leaking cooler results in loss of cooling oil and compressed air.

A clogged cooler is indicative of unfavorable ambient conditions. Such ambient conditions clog the cooling air ducts in the machine's interior and the motors resulting in increased wear and tear.

➤ Have an authorized KAESER service representative clean the cooling air ducts.

Material: Brush and vacuum cleaner
Face mask (as required)

Precondition: The power supply disconnecting device is switched off,
the device is locked off,
the absence of any voltage has been verified.

The machine has cooled down.

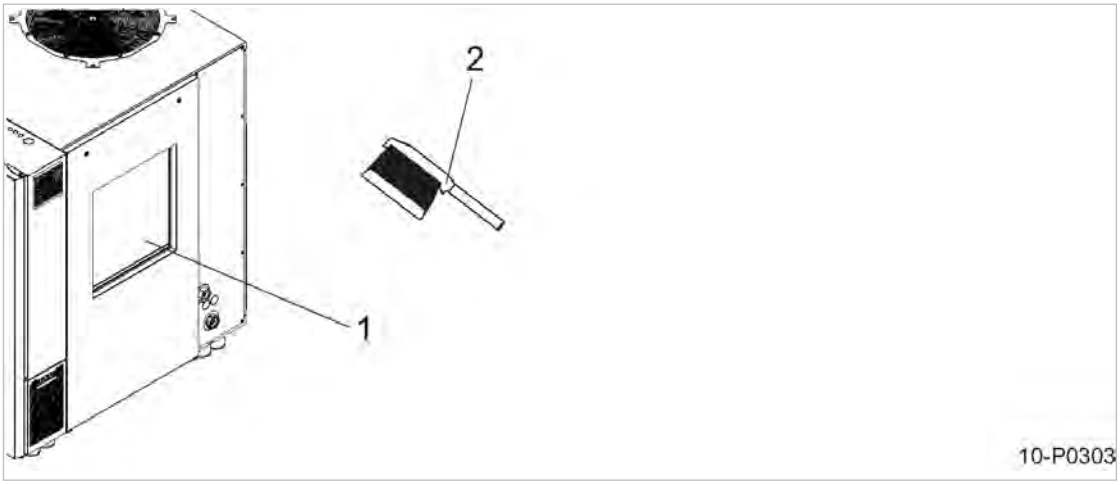


Fig. 34 Cleaning the cooler

1 Cooler
2 Brush

### Cleaning the cooler

Do not use sharp objects to clean the cooler. It could be damaged.

Avoid creating clouds of dust.

➤ Dry brush the cooler and use a vacuum cleaner to suck up the dirt.

The cooler can't be cleaned thoroughly?

➤ Have stubborn clogging removed by an authorized KAESER service representative.

### Checking the cooler for leaks

➤ Carry out visual inspection: Did condensate escape?

Is the cooler leaking?

➤ Have the defective cooler repaired immediately by an authorized KAESER service representative.

## 10.6 Option K1 Replacing the cooler

The maintenance interval for replacement of the air-cooled compressed air aftercooler is dependent on the number of load changes for the machine.

1. **WARNING** *Danger of serious injury from the compressed air aftercooler bursting!*
   ➤ *Observe maintenance intervals for the compressed air aftercooler!*
2. Replacement intervals will be displayed by the controller.
3. Arrange for the compressed air aftercooler to be replaced without delay by an authorized KAESER service representative.

## 10.7 Option K9 Water-cooling Maintenance

Cooler clogging causes overheating and machine damage.

➤ Observe the block discharge temperature to detect any tendency to rise.

Check the cooler regularly for leaks and contamination. Frequency of checking is dependant on the characteristics of the cooling water.

Precondition The power supply disconnecting device is switched off,
the device is locked off,
the absence of any voltage has been verified.

### Checking for leaks

Special attention must be paid to aging and corrosion of the cooler materials under long term operating conditions. If a leak occurs, condensate will run into the cooling water.

1. Check the cooler visually for leaks.
2. Have an authorized KAESER service representative check the cooler for internal leaks at least once a year.

### Cleaning

➤ An authorized KAESER service representative should clean the cooler when the block discharge temperature is 50 °F above the annual average.

## 10.8 Motor maintenance

In motors with bearings with re-lubricating facility, the lubricating fittings are located at the outside of the machine. The grease lines are filled at the factory.

Use only the high temperature grease UNIREX N3 for the motor bearings. Damage to bearings caused by the use of other brands of grease is excluded from the warranty.

Material Grease gun with UNIREX N3
Cleaning cloths

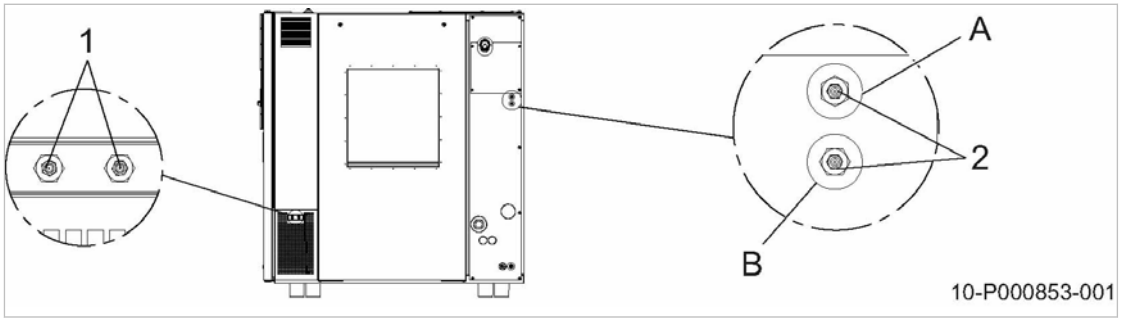


Fig. 35 Motor maintenance

| | | | |
|---|---|---|---|
| 1 | Grease fittings compressor motor | A | A-side motor bearing |
| 2 | Grease fittings fan motor | B | B-side motor bearing |

**Compressor motor:**

The required quantity of grease is stated on the compressor drive motor nameplate or see chapter 2.13.1

Precondition Compressor motor running

1. Clean the grease fittings with a cleaning cloth.
2. Grease both motor bearings with a grease gun.
3. Reset the maintenance counter.

**Fan motor:**

The required quantity of grease is stated on the fan motor nameplate or see chapter 2.13.2

Precondition Fan motor running

1. Clean the grease fittings with a cleaning cloth.
2. Grease both motor bearings with a grease gun.
3. Reset the maintenance counter.

## 10.9 Testing the safety relief valve

In order to check the safety relief valve, the machine's working pressure is raised above the activating pressure of the valve.

Blow off protection and air system pressure monitoring are switched off during the test. In normal operation, the blow-off protection will switch off the machine before the safety relief valve responds. During the inspection, the blow-off protection will switch off the machine only when the opening pressure differential of the safety relief valve has been exceeded by 14.7 psig.

- ➤ Follow the detailed description of this procedure in theSIGMA CONTROL 2 operating manual.
- ➤ Never operate the machine without a correctly functioning safety relief valve.
- ➤ Have a defective safety relief valve replaced immediately.

**⚠ WARNING**

*Risk of hearing damage when safety relief valve blows off!*

➤ *Close all access doors, replace and secure all removable panels.*

➤ *Always wear ear protection.*

Precondition The machine is switched off.

1. Close the site-provided shut-off valve at the air main.
2. Read the activating pressure on the valve.
   (the activating pressure is usually to be found at the end of the part identification)
3. Log on to SIGMA CONTROL 2 with access level 2.
4. Observe the display of pressure on SIGMA CONTROL 2 and call up the test function.
5. **⚠ WARNING** *Risk of burning from compressed air when safety relief valve blows off!*
   ➤ *Close all access doors, replace and secure all removable panels.*
   ➤ *Wear eye protection.*
6. End the test as soon as the safety relief valve blows off or working pressure exceeds the opening pressure differential of the safety relief valve by nearly 14.7 psig.
7. If necessary, vent the machine and replace the defective safety relief valve.
8. Deactivate the test function.
9. Open the user's shut-off valve between the machine and the air distribution network.

## 10.10 Checking the overheating safety shutdown function

The machine should shut down if the block discharge temperature (ADT) reaches a maximum of 425°F.

➤ Check the safety shutdown function as described in the SIGMA CONTROL 2 operating manual.

The machine does not shut down?

➤ Have the safety shut-down function checked by an authorized KAESER service representative.

## 10.11 Checking the EMERGENCY STOP push button

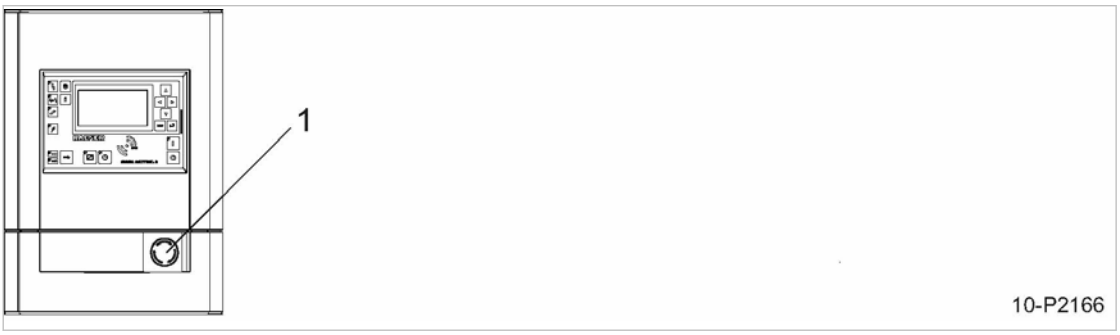


Fig. 36 Checking the EMERGENCY STOP push button

[9] EMERGENCY STOP push button

Precondition Compressor motor running

1. EMERGENCY STOP push button actuated.

   The compressor motor stops, the pressure system is vented, and the machine is prevented from automatically re-starting.

   The compressor motor does not stop?

   The safety function of the EMERGENCY STOP push button is no longer ensured.

   ➤ Shut down the machine immediately and call an authorized KAESER service representative.

2. Turn the EMERGENCY STOP push button in the direction of the arrow to unlatch it.
3. Acknowledge the alarm message.

## 10.12 Cooler compressed air inlet temperature switch

If the machine exceeds the compressed air inlet temperature at the cooler (Option K1 ≥ 311 °F, Option K9 ≥ 311 °F), a fault message is shown at SIGMA CONTROL 2 (see Operating Manual for SIGMA CONTROL 2).

Have shutdown functionality of the temperature switch checked by an authorized KAESER service representative.

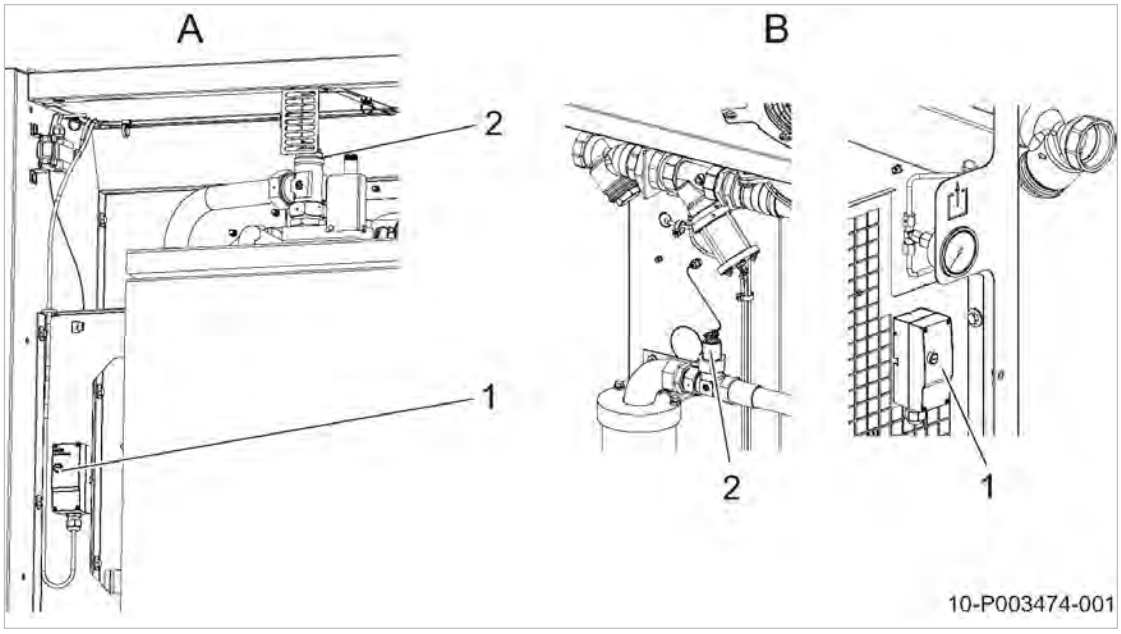


Fig. 37 Compressed air inlet temperature switch

| | | | |
|---|---|---|---|
| A | Cooler option K1 - Air cooling | 1 | Temperature switch |
| B | Cooler option K9 – Water-cooling | 2 | Temperature sensor |

➤ The temperature switch is non-adjustable.

### Unlocking the temperature switch

Should the compressed air inlet temperature fall below the set value, the temperature switch must be unlocked manually.

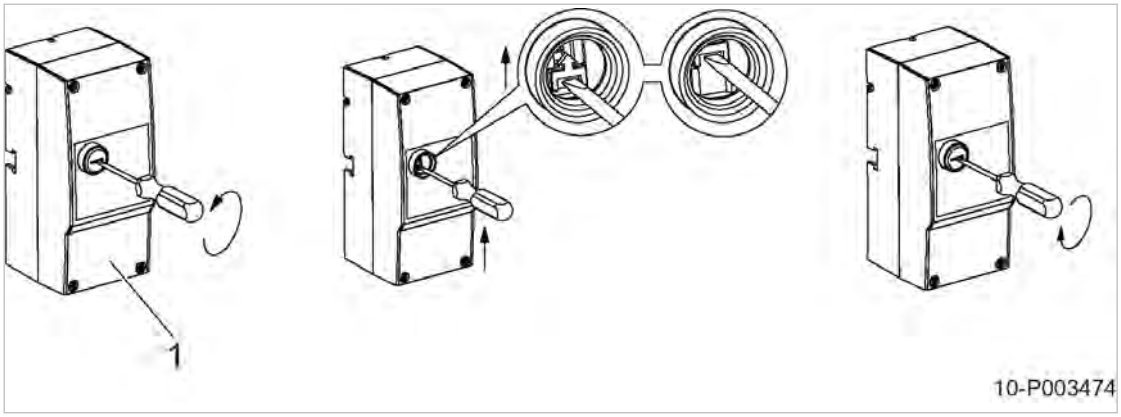


Fig. 38 Unlocking the temperature switch

[1] Temperature switch

1. Open the cover.
2. Unlock the snap-action switch by pulling it upwards.
3. Close the cover
4. Acknowledge the alarm message.

## 10.13 Venting the machine (depressurizing)

Venting takes place in three stages:

- Isolate the compressor from the air system.
- Venting the cooler.
- Manually vent compressed air after the network pressure gauge (inlet pressure) (rear left access door).

The machine must be isolated from the compressed air network and completely vented before undertaking any work on the pressure system.

Precondition Cut-off the electrical power supply via the power supply disconnecting device,
ensure that the device is locked out and tagged out,
verify the absence of any voltage.

**⚠ CAUTION**

*Compressed air!*
*Compressed air and devices under pressure can injure or cause death if the contained energy is released suddenly.*

➤ *Fully vent all pressurized components and enclosures.*

### Isolating the machine from the compressed air system

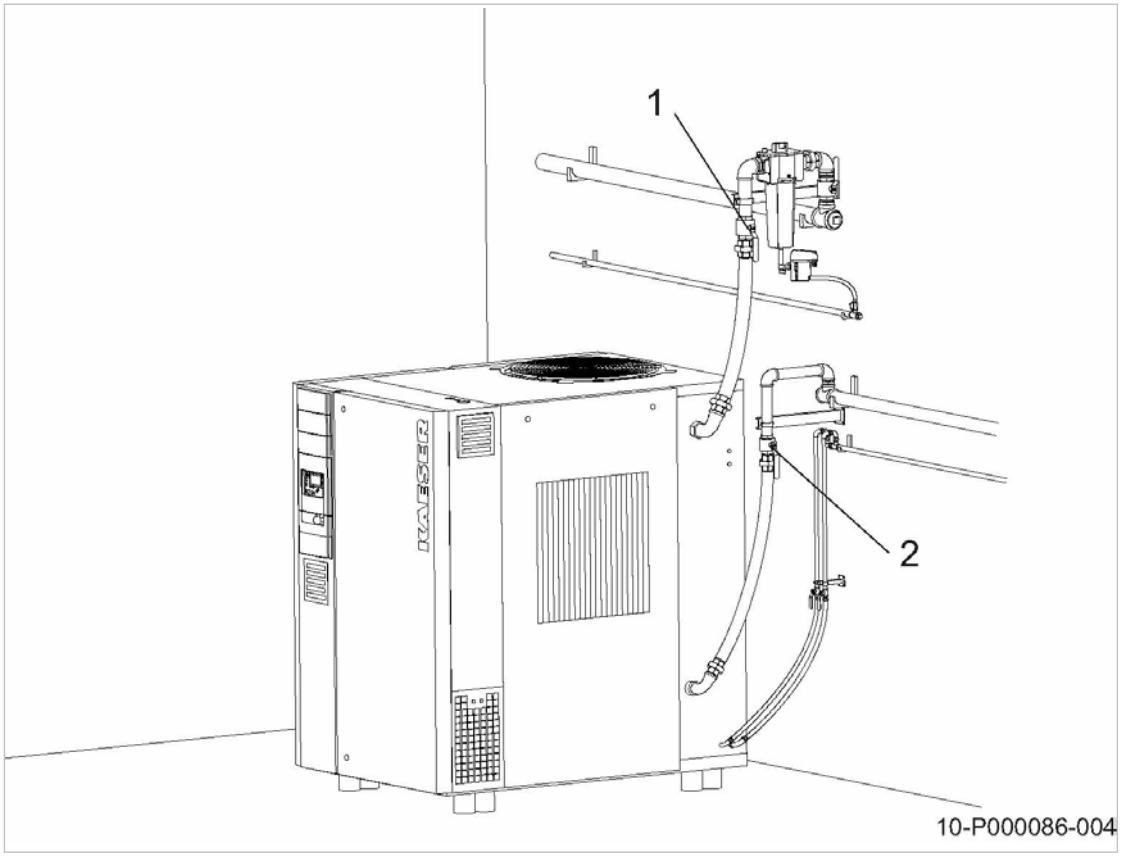


Fig. 39 Mount the user's shut-off valves.

1 User's shut-off valve (inlet pressure)
2 User's shut-off valve (final pressure)

➤ Close the user's shut-off valves (inlet and final pressure).

If no shut-off valves are provided by the user, the complete air network must be vented.

### Venting the cooler

Precondition Remove the panel (see chapter 4.1).

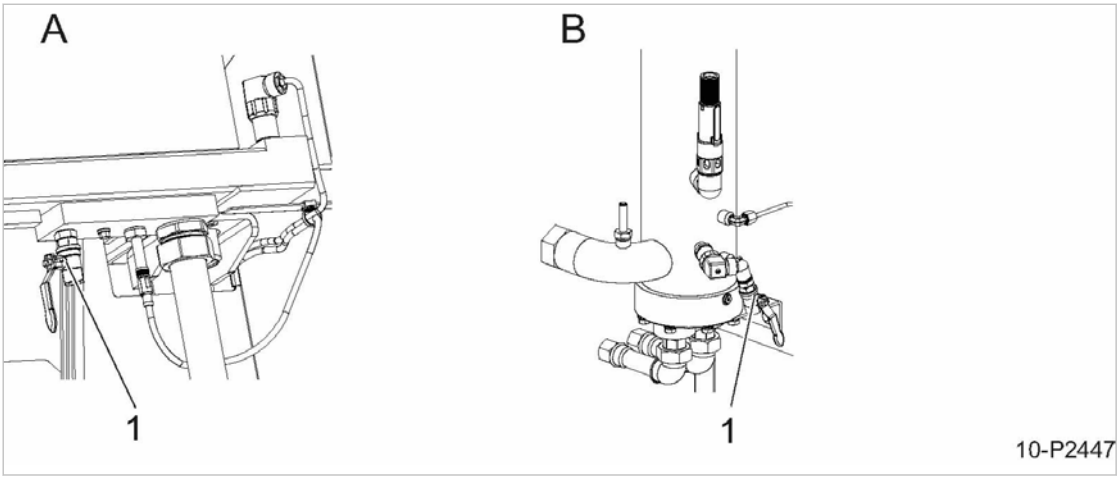


Fig. 40 Venting the cooler.

1 Shut-off valve
A Cooler option K1-air cooling
B Cooler option K9-water cooling

➤ Slowly open the shut-off valve 1 and check that the network pressure gauge (final pressure) reads 0 psig.

The network pressure gauge (final pressure) does not read 0 psig after automatic venting?

➤ Make sure that the shut-off valve 1 is opened or that the complete air system is vented.

➤ Slowly open the shut-off valve 1 to release pressure.

➤ If manual venting does **not** attain depressurization: Contact an authorized KAESER service representative.

### Venting the inlet pressure side

Precondition Left-hand access door opened (see chapter 4.1).

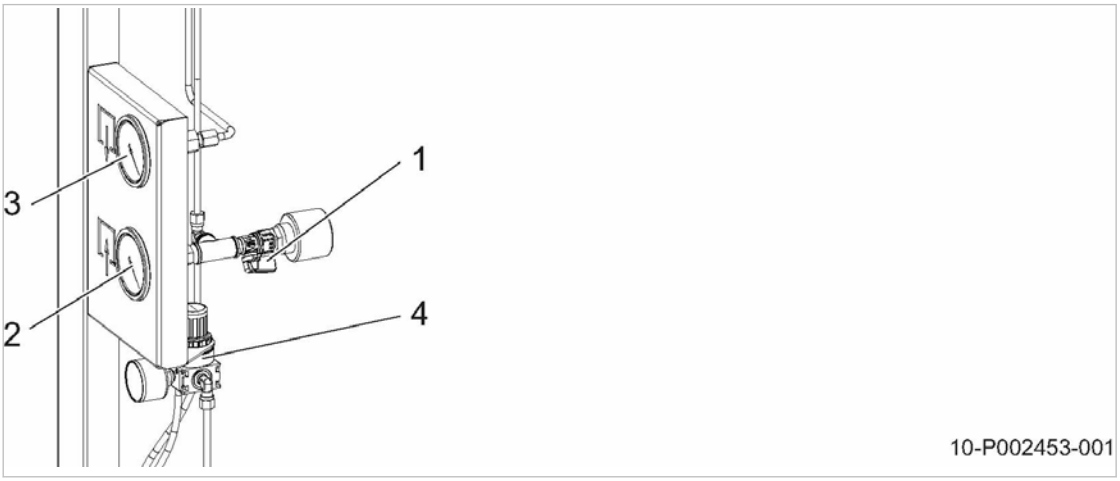


Fig. 41 Venting the inlet pressure side

1 Shut-off valve
2 Network pressure gauge (inlet pressure)
3 Network pressure gauge (final pressure)
4 Control pressure control valve

➤ Slowly open the shut-off valve and check that the network pressure gauge (inlet pressure) reads 0 psig.

Do *not* change the control pressure control valve

The network pressure gauge (inlet pressure) does not read 0 psig after automatic venting?

➤ Make sure that the shut-off valve is opened or that the complete compressed air network is vented.

➤ Slowly open the shut-off valve [1] to release pressure.

➤ If manual venting does **not** attain depressurization: Contact an authorized KAESER service representative.

## 10.14 Checking the oil level

The oil level can be read off on the oil sight glass.

Precondition The machine is running under LOAD.

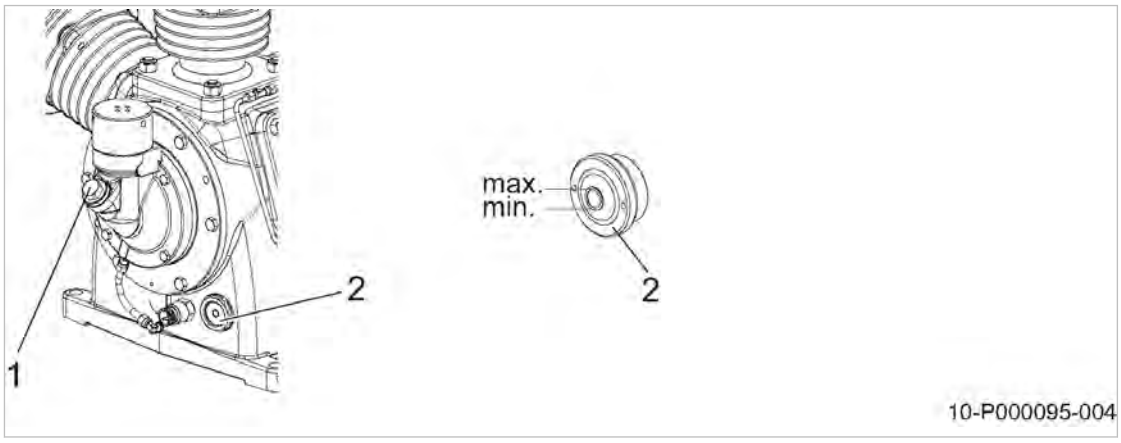


Fig. 42 Checking the oil level

[1] Oil filler plug
[2] Oil sight glass

1. **⚠ CAUTION**
   *Danger of burning - hot surfaces!*
   ➤ *Wear long-sleeved clothing and protective gloves.*
2. Check the compressor cooling oil level with machine running under LOAD.

Result Top off when the compressor oil level falls to the minimum mark. Top off the oil

## 10.15 Topping off the compressor oil

Material Compressor oil

Precondition The power supply disconnecting device is switched off,
lockout and tagout the device,
the absence of voltage has been verified.

Depressurize all pressurized components and enclosures (see chapter 10.13).

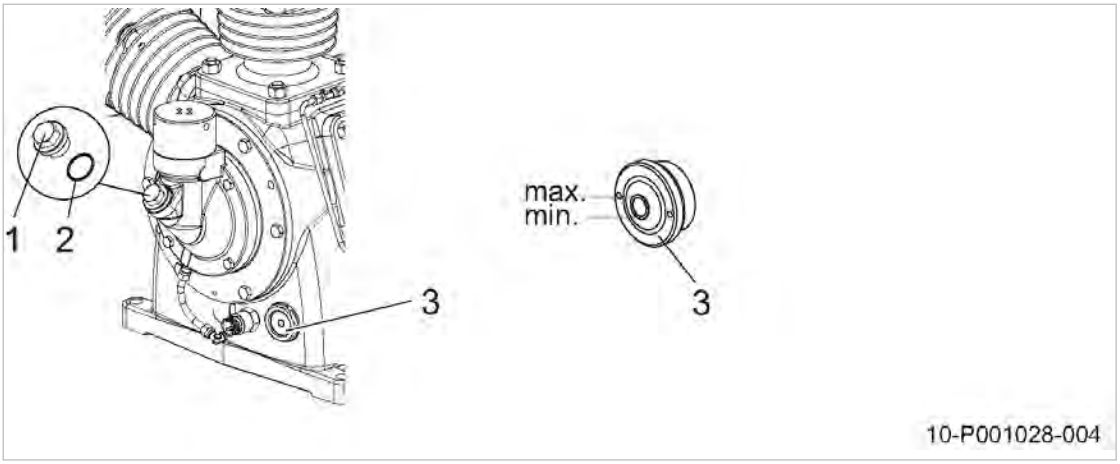


Fig. 43 Topping off the compressor oil

1 Screw plug
2 O-ring
3 Oil sight glass

1. **NOTICE** *The machine can be damaged by unsuitable oil.*
   - ➤ *Never mix different types of oil.*
   - ➤ *Never top off with a different type of oil to that already used in the machine.*
2. Slowly unscrew the filler plug.
3. Top off to bring the oil to the correct level.
4. Replace the filler plug's o-ring if necessary and screw the plug into the filler neck.

**Starting the machine and performing a trial run**

1. Close all access doors, replace and secure all removable panels.
2. Open the user's inlet and discharge shut-off valves.
3. Close the shut-off valves at the cooler and network pressure gauge (inlet pressure).
4. Switch on the power supply disconnecting device.
5. Switch on the machine, after approx. 2 minutes of operation: Check the cooling oil level and top off if necessary.
6. Switch off the machine and visually check for leaks.

## 10.16 Changing the compressor oil

The initial charge of oil should be changed as specified in the table 52.
Drain the oil completely from the compressor block.

Change the oil immediately if it becomes milky.
It is contaminated with condensate.

Contact an authorized KAESER service representative if condensate is detected in the compressor oil. It is necessary to adapt the block discharge temperature to individual ambient conditions.

The machine must be isolated from the compressed air network and completely vented before undertaking any work on the pressure system.

Material Compressor oil
Oil receptacle

The maintenance hose with hose coupling and shut-off valve is stowed behind the left access door.

Precondition The machine must have been running in LOAD for at least 5 minutes.
The power supply disconnecting device is switched off,
lockout and tagout the devicef,
the absence of voltage has been verified.

Depressurize all pressurized components and enclosures (see chapter 10.13).

**⚠ CAUTION**

*Danger of burning from hot components and scalding from escaping oil.*

➤ *Wear long-sleeved clothing and gloves.*

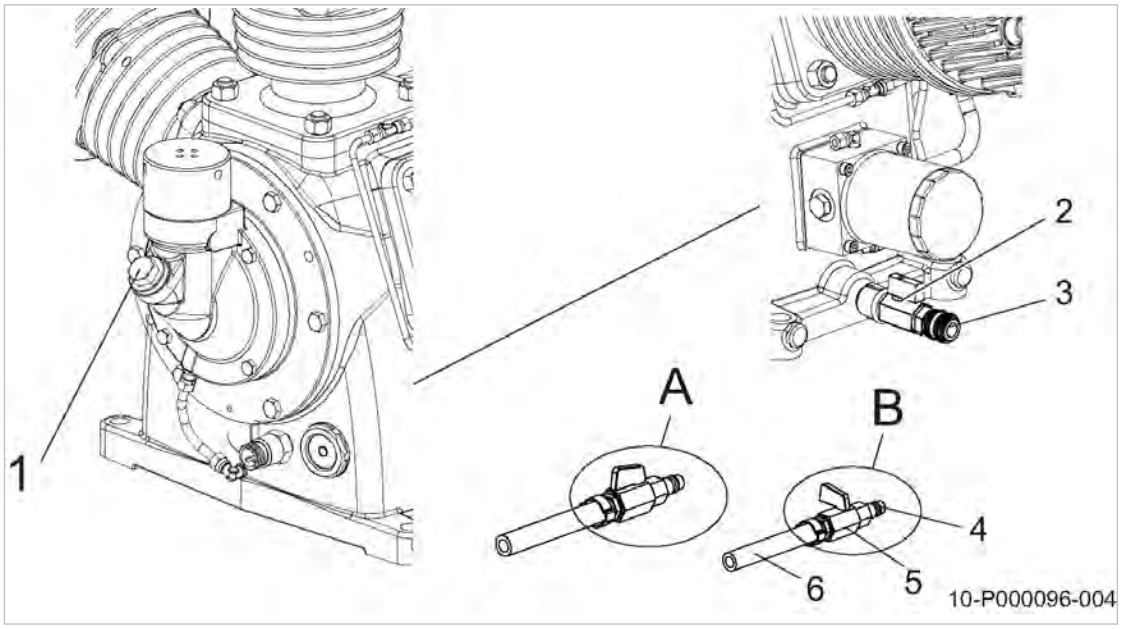


Fig. 44 Changing the compressor oil

| | | | |
|---|---|---|---|
| 1 | Screw plug | 5 | Shut-off valve |
| 2 | Shut-off valve (oil drain) | A | Shut-off valve open |
| 3 | Hose coupling | B | Shut-off valve closed |
| 4 | Male plug-in hose fitting | 6 | Maintenance hose |

1. Prepare an oil receptacle.
2. With the shut-off valve closed, insert the male plug-in hose fitting 4 into the hose coupling 3.
3. Place the end of the maintenance hose 6 in the oil receptacle and secure it in place.
4. Open shut-off valve 2.
5. Slowly open the shut-off valve 5 in the maintenance hose and allow the condensate to drain completely.
6. Close the shut-off valve 2 and remove the male plug-in hose fitting 4 from the coupling.

Result The cooling oil is drained from the compressor block.

#### Filling with compressor oil

1. Open the filler plug (1) (Fig. 44) slowly.
2. Filling with compressor oil
3. Check the filler plug and o-ring for damage and screw the plug back in again.

#### Starting the machine and performing a trial run

1. Close all access doors, replace and secure all removable panels.
2. Open the user's inlet and discharge shut-off valves.
3. Close the shut-off valve at the cooler and network pressure gauge (inlet pressure).
4. Switch on the electrical power supply via the power supply disconnecting device and reset the maintenance interval counter.
5. Start the machine and check the oil level again after about 2 minutes operation and topping off again, if necessary.
6. Switch off the machine and visually check for leaks.

➤ Dispose of the old oil in accordance with valid environmental protection regulations.

## 10.17 Changing the micro-filter element in the crankcase vent

Material: Micro-filter element

Precondition: The power supply disconnecting device is switched off,
lockout and tagout the device,
the absence of any voltage has been verified.

The machine has cooled down.

Depressurize all pressurized components and enclosures (see chapter 10.13).

**⚠ CAUTION**

*Danger of burning from hot components and scalding from escaping oil.*

➤ *Wear long-sleeved clothing and gloves.*

Do not use the machine without a vent cap.

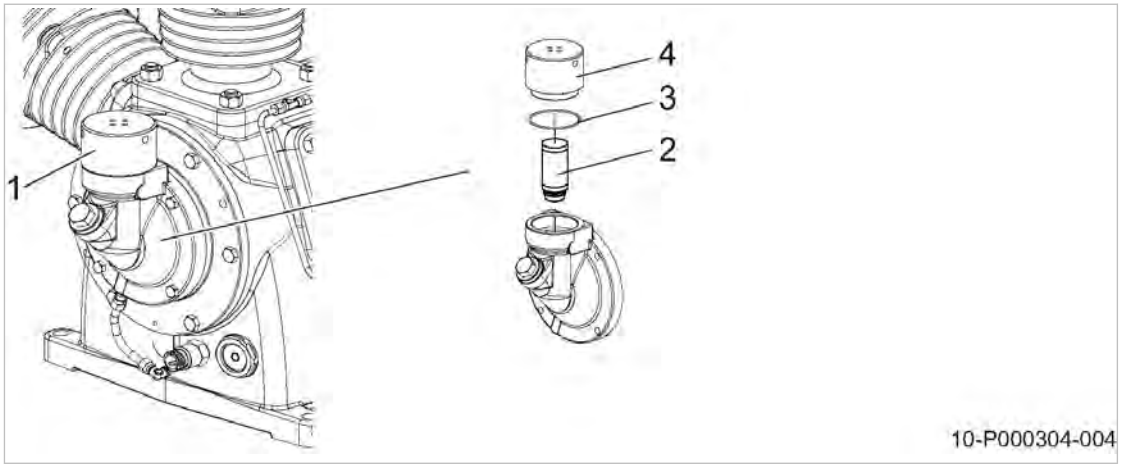


Fig. 45 Changing the micro-filter element in the crankcase vent

| | | | |
|---|---|---|---|
| 1 | Crankcase venting | 3 | O-ring |
| 2 | Micro-filter element | 4 | Venting cap |

1. Unscrew the vent cap from the crankcase vent.
2. **CAUTION** *Escaping oil mist is damaging to health.*
   - ➤ *Do not inhale oil mist and vapors.*
   - ➤ *Avoid contact with skin and eyes.*
3. Pull out the micro-filter element.

Dispose of micro-filter element in accordance with environment protection regulations.

4. Insert a new micro-filter element.
5. Replace the cap in the crankcase vent and check that the O-ring is properly seated.

**Starting the machine and performing a trial run**

1. Close all access doors, replace and secure all removable panels.
2. Open the user's inlet and discharge shut-off valves.
3. Close the shut-off valve at the cooler and network pressure gauge (inlet pressure).
4. Switch on the electrical power supply via the power supply disconnecting device and reset the maintenance interval counter.
5. Start the machine and run it for 2 minutes, then stop it and visually check for leaks.

## 10.18 Changing the crankcase oil filter

Material
Oil filter
Oil receptacle
Cleaning cloth

Precondition
The power supply disconnecting device is switched off,
lockout and tagout the device,
the absence of any voltage has been verified.

The machine has cooled down.

Depressurize all pressurized components and enclosures (see chapter 10.13).

1. **CAUTION** *Danger of burning from hot components and scalding from escaping oil.*
   - ➤ *Wear long-sleeved clothing and gloves.*
2. Change the oil filter after 2000 operating hours.

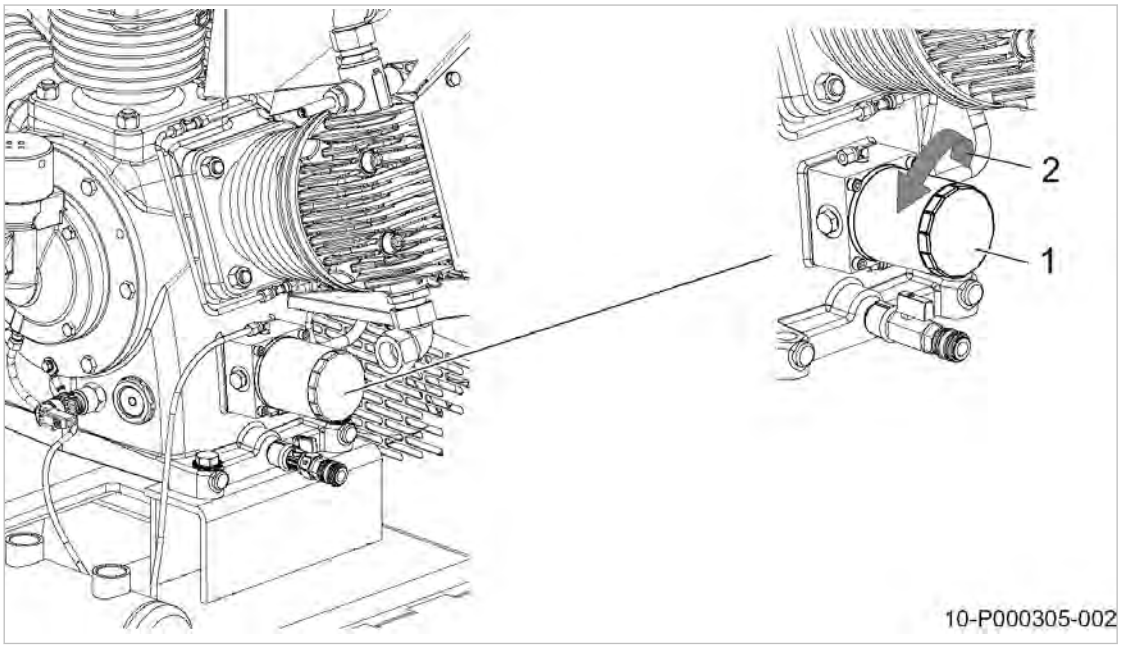


Fig. 46 Changing the crankcase oil filter

1 Oil filter
2 Direction of rotation to unscrew the filter

1. **CAUTION** *Escaping oil mist is damaging to health.*
   - ➤ *Do not inhale oil mist and vapors.*
   - ➤ *Avoid contact with skin and eyes.*
2. Unscrew the oil filter counter clockwise; catch oil spillage and dispose of correctly.
3. Clean sealing faces with a clean cloth.
4. Lightly oil the new filter's gasket.
5. Turn the oil filter clockwise by hand to tighten. Do not use any tool.
6. Check the oil level.

### Starting the machine and performing a trial run

1. Close all access doors, replace and secure all removable panels.
2. Open the user's inlet and discharge shut-off valves.
3. Close the shut-off valve at the cooler and network pressure gauge (inlet pressure).
4. Switch on the electrical power supply via the power supply disconnecting device and reset the maintenance interval counter.
5. Start the machine and run it for 2 minutes, then stop it and visually check for leaks.

## 10.19 Dirt trap maintenance

The machine must be isolated from the compressed air network and completely vented before undertaking any work on the pressure system.

Material: Compressed air for blowing out
Cleaning agent

Precondition: Cut-off the electrical power supply via the power supply disconnecting device,
ensure that the device is locked out and tagged out,
verify the absence of any voltage.

The machine has cooled down.

Vent all pressurized components and enclosures (see chapter 10.13).

### 10.19.1 Dirt trap in the inlet line

When a fault occurs in IDLE.

➤ Clean the dirt trap strainer.

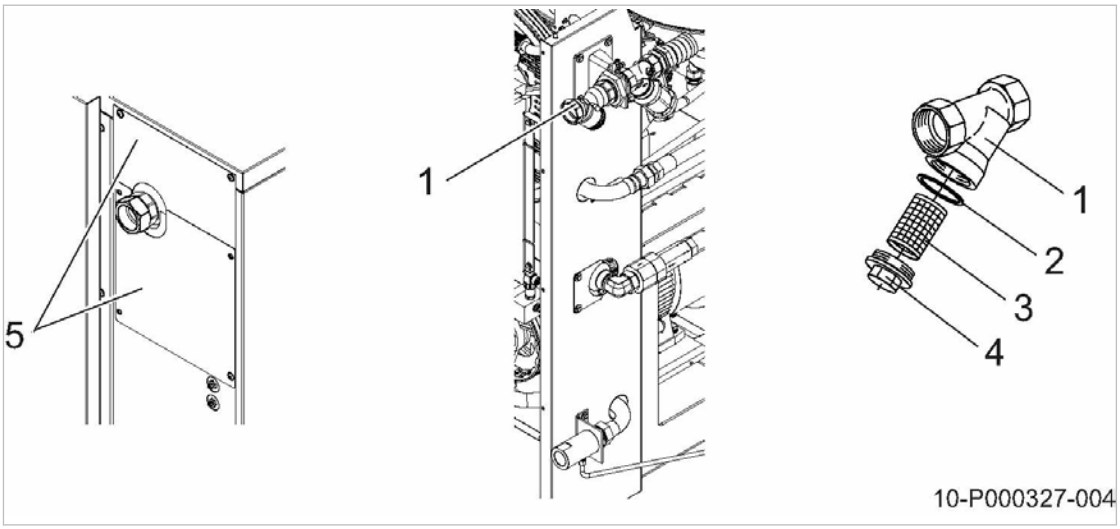


Fig. 47 Dirt trap in the inlet line

1. Dirt trap
2. Gasket or O-ring
3. Dirt trap strainer
4. Screw plug
5. Cover plate

1. **CAUTION** *Fatal injury caused by components under high pressure!*
   - ➤ *Isolate the compressor from the air system.*
   - ➤ *Vent (depressurize) the machine completely.*
   - ➤ *Check for zero pressure.*
2. Remove the cover plate.
3. Remove the plug and clean the gasket or O-ring.
4. Remove the dirt trap strainer and blow clean.
5. Reassemble all parts with gasket or O-ring.
6. Install the cover plate.

#### Starting the machine and performing a trial run

1. Close all access doors, replace and secure all removable panels.
2. Open the user's inlet and discharge shut-off valves.
3. Close the shut-off valves at the cooler and network pressure gauge (inlet pressure).
4. Switch on the electrical power supply via the power supply disconnecting device and reset the maintenance interval counter.
5. Start the machine and run it for 2 minutes, then stop it and visually check for leaks.

### 10.19.2 Dirt trap in the crankcase

If a fault occurs because of insufficient oil pressure.

➤ Clean the dirt trap strainer.

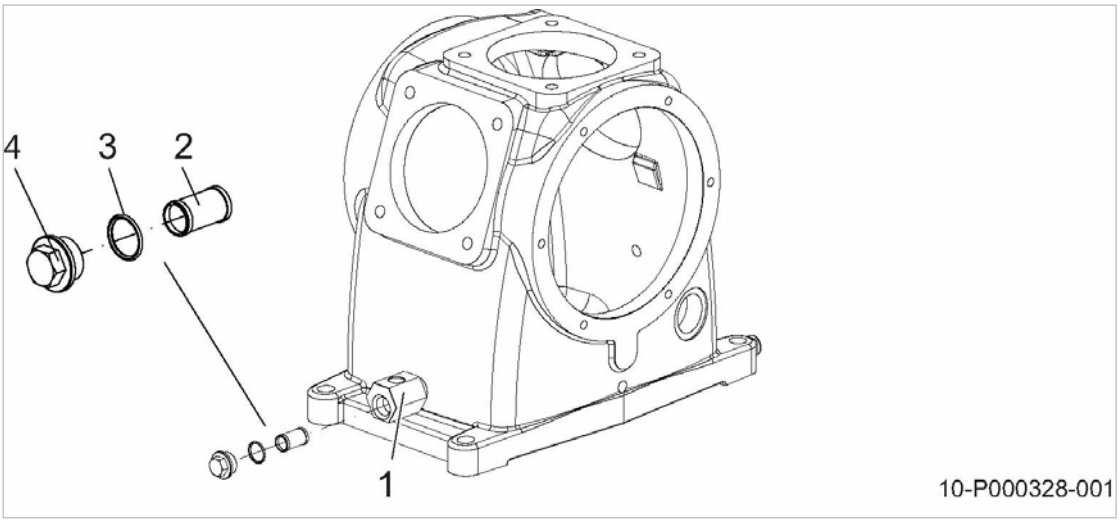


Fig. 48 Dirt trap in the crankcase

| | | | |
|---|---|---|---|
| 1 | Dirt trap | 3 | O-ring |
| 2 | Dirt trap strainer | 4 | Screw plug |

1. **⚠ CAUTION** *Danger of burns from hot components!*
   ➤ *Wear long-sleeved clothing and gloves.*
2. Remove the plug and clean the O-ring.
3. Remove the dirt trap strainer and blow clean.
4. Re-assemble the dirt trap and plug with the O-ring.

#### Starting the machine and performing a trial run

1. Close all access doors, replace and secure all removable panels.
2. Open the user's inlet and discharge shut-off valves.
3. Close the shut-off valves at the cooler and network pressure gauge (inlet pressure).
4. Switch on the electrical power supply via the power supply disconnecting device and reset the maintenance interval counter.
5. Start the machine and run it for 2 minutes, then stop it and visually check for leaks.

### 10.19.3 Dirt trap in the filter

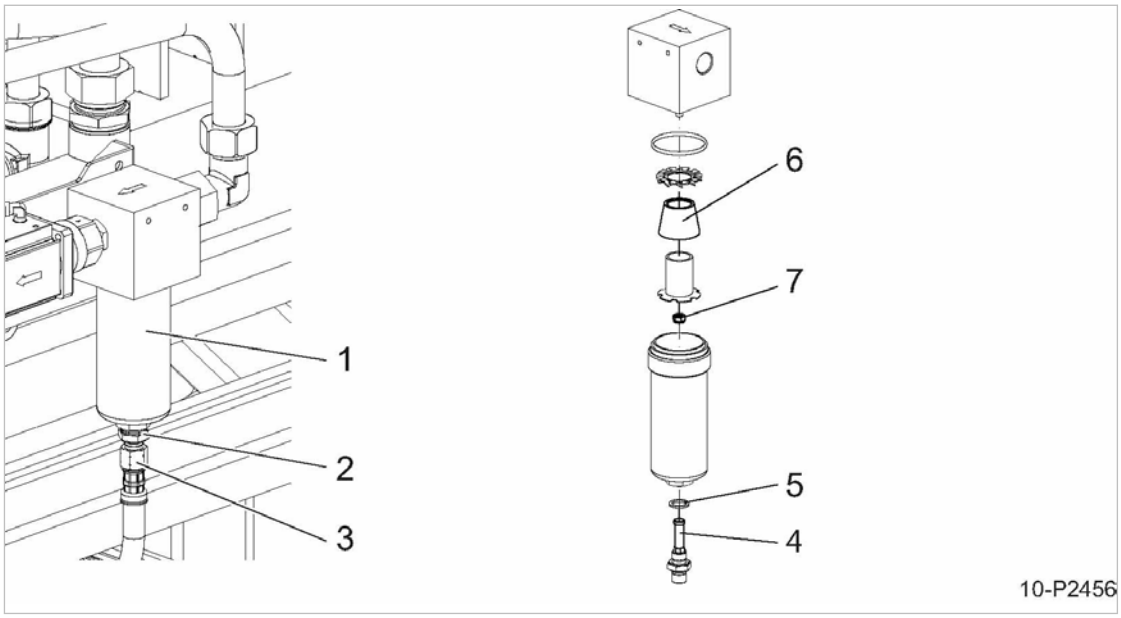


Fig. 49 Dirt trap in the filter

| | | | |
|---|---|---|---|
| 1 | Filter housing | 5 | Gasket |
| 2 | Double-ended male stud fitting | 6 | Silencer insert |
| 3 | Condensate drain hose | 7 | Nut |
| 4 | Dirt trap with double nipple | | |

1. **CAUTION** *Fatal injury caused by components under high pressure!*
   - ➤ *Isolate the compressor from the air system.*
   - ➤ *Vent (depressurize) the machine completely.*
   - ➤ *Check for zero pressure.*
2. Loosen the condensate hose
3. Unscrew the double fitting with dirt trap strainer from the filter housing.
4. Unscrew the filter housing and rinse with warm water.
5. Blow out the dirt trap strainer and filter housing to clean the units.
6. Remove the retaining nut and the silencer insert.
7. Blow the silencer insert clean from inside to outside.
8. Reassemble in reverse order.

#### Starting the machine and performing a trial run

1. Close all access doors, replace and secure all removable panels.
2. Open the user's inlet and discharge shut-off valves.
3. Close the shut-off valve at the cooler and network pressure gauge (inlet pressure).
4. Switch on the electrical power supply via the power supply disconnecting device and reset the maintenance interval counter.
5. Start the machine and run it for 2 minutes, then stop it and visually check for leaks.

## 10.20 Check valve maintenance

The machine must be isolated from the compressed air network and completely vented before undertaking any work that entails opening the pressure system. Both network pressure gauges (initial and final pressure) read 0 psig.

Material
Compressed air for blowing out
Cleaning cloth
Service KIT (if required)

Precondition
The power supply disconnecting device is switched off,
lock out and tag out the device,
the absence of any voltage has been verified.

The machine has cooled down.

Fully vent all pressurized components and enclosures (see chapter 10.13).

### 10.20.1 Idle mode check valve

The check valve is mounted on the collecting pipe. It prevents compressed air from escaping out into to the ambient air while the machine is running.

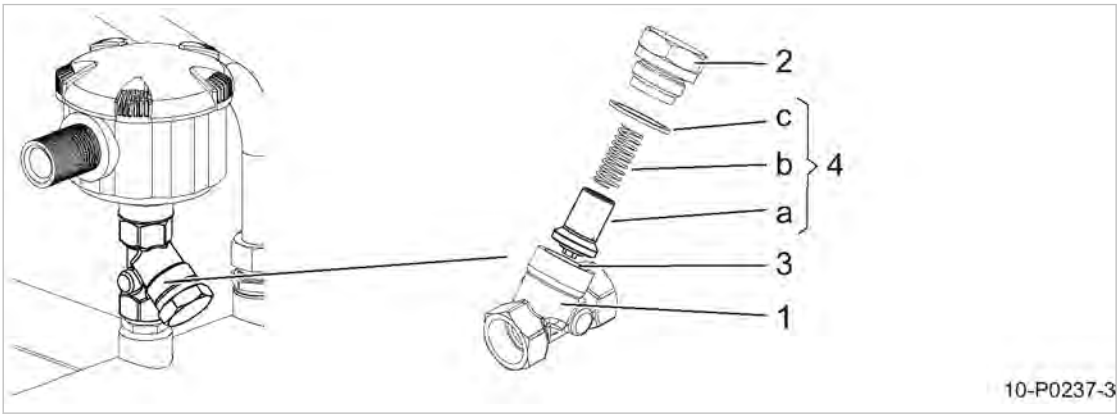


Fig. 50 Idle mode check valve

| | | | |
|---|---|---|---|
| 1 | Housing | a | Valve cone |
| 2 | Screw plug | b | Spring |
| 3 | Valve seat | c | O-ring |
| 4 | Service KIT | | |

1. **WARNING** *Risk of fatal injury from components under high pressure!*
   - *Isolate the machine from the compressed air network.*
   - *Vent the machine completely.*
   - *Verify the absence of pressure.*
2. Open the screw plug.
3. Clean the valve seat and valve cone with a cleaning cloth or blow out with dry compressed air (<30 psi!).

Should the valve seat show severe wear or damage, the check valve must be replaced by an authorized KAESER service representative.

4. Insert the O-ring into the groove on the screw plug. If required, replace individual parts (Service KIT).
5. Insert the valve cone and spring into the housing. If required, replace individual parts (Service KIT).
6. Close the check valve using the screw plug.

**Starting the machine and performing a test run**

1. Close all maintenance doors, replace and secure all removable panels.
2. Open the user-end compressed air inlet and outlet shut-off valves.
3. Close the shut-off valve at the cooler and network pressure gauge (initial pressure).
4. Switch on the power supply disconnecting device.
5. Switch the machine on and run it for around 2 minutes, then shut it down and visually check for leaks.

## 10.21 Replacing the condensate drain solenoid valve

Ingress of dirt during operation can prevent the condensate drain solenoid valve from sealing. For reasons of operational safety, replace the condensate drain solenoid valve as soon as SIGMA CONTROL 2 displays a corresponding message.

Material: Spare part

Precondition: The machine is switched off.

The power supply disconnecting device is switched off,
the device is locked off,
the absence of any voltage has been verified.

Depressurize all pressurized components and enclosures (see chapter 10.13).

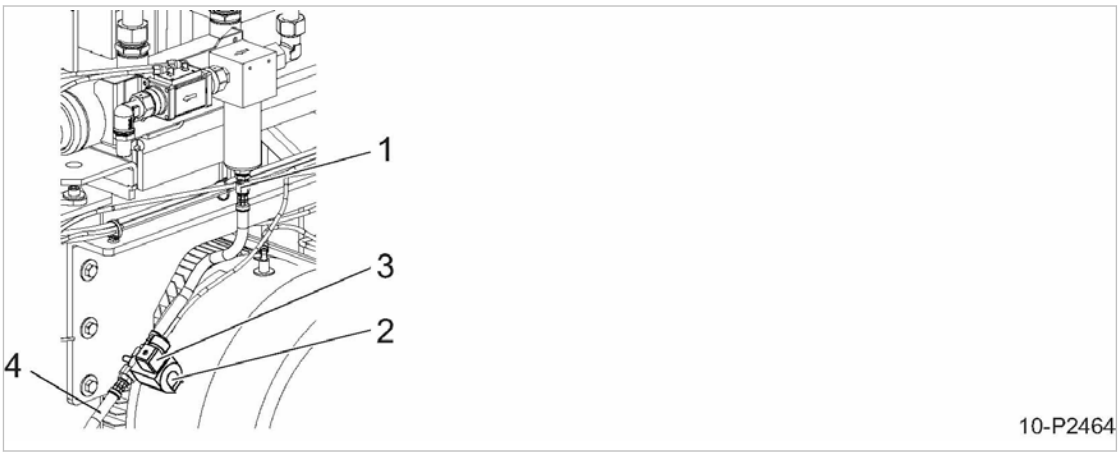


Fig. 51 Replacing the condensate drain solenoid valve

| | | | |
|---|---|---|---|
| 1 | Union fittings | 3 | Connecting socket |
| 2 | Condensate drain solenoid valve | 4 | Pressure line condensate outlet |

1. **WARNING** *Danger of fatal injury because of pressurized components.*
   - ➤ *Isolate the compressor from the air system.*
   - ➤ *Vent the machine completely to atmospheric.*
   - ➤ *Check for zero pressure.*

2. Remove the connecting socket from the solenoid valve.
3. Remove the union fittings from the filter.
4. Remove the hose from the condensate outlet.
5. Remove the pressure lines from the condensate drain solenoid valve.
6. Mount the new condensate drain solenoid valve and fix the pressure lines.
7. Fix the connecting socket.

**Starting the machine and carrying out a trial run**

1. Close all access doors, replace and secure all removable panels.
2. Open the user's inlet and discharge shut-off valves.
3. Close the shut-off valve at the cooler and network pressure gauge (inlet pressure).
4. Switch on the power supply and reset the maintenance interval counter.
5. Start the machine and run it for 2 minutes, then stop it and visually check for leaks.

## 10.22 Option F14 Electronic condensate drain

The accumulated condensate is removed by an electronic condensate drain.

The condensate drain cannot be cleaned. If condensate no longer drains, the service unit must be exchanged.

➤ Check the condensate drain regularly as described below and exchange the service unit as necessary.

### 10.22.1 Condensate drain check

Dependent on the condensate drain version, the controller is equipped with an additional LED *Alarm*.

Precondition The machine is switched off.

The *Power/Service* LED is illuminated.

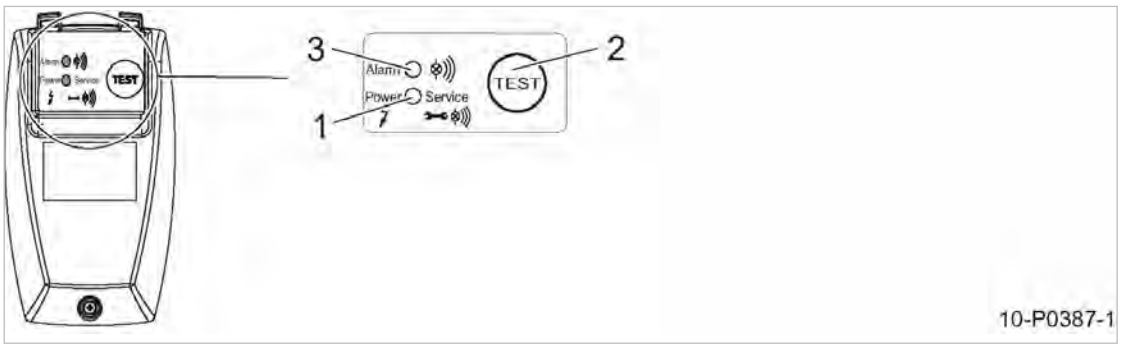


Fig. 52 Option K5/K6: Condensate drain check

1. *Power/Service* LED
2. «TEST» key
3. *Alarm* LED

1. **⚠ CAUTION** *Danger of burns from hot components around the condensate drain!*
   ➤ *Proceed with caution.*

2. With one hand, lightly touch the condensate line on the condensate drain.
3. With your other hand, push and hold the «TEST» key on the condensate drain for at least 2 seconds.

Result As soon as the condensate drain opens, you will feel a short pressure surge in the condensate line.

In the event that you do **not** feel any pressure surge during the manual test, replace the service unit.

## 10.22.2 Replace the service unit

The condensate drain cannot be cleaned. If condensate no longer drains, the service unit must be exchanged.

Material KAESER Service-Unit

Sealing tape for sealing the screw-in part

If required: O-ring 16x2 (5.1519.0)

Precondition The machine is switched off.

The *Power/Service* LED is illuminated. (see figure 52).

**⚠ WARNING**

*Danger of fatal injury from electric shock!*

➤ *Never open the control unit.*

**Removing the service unit**

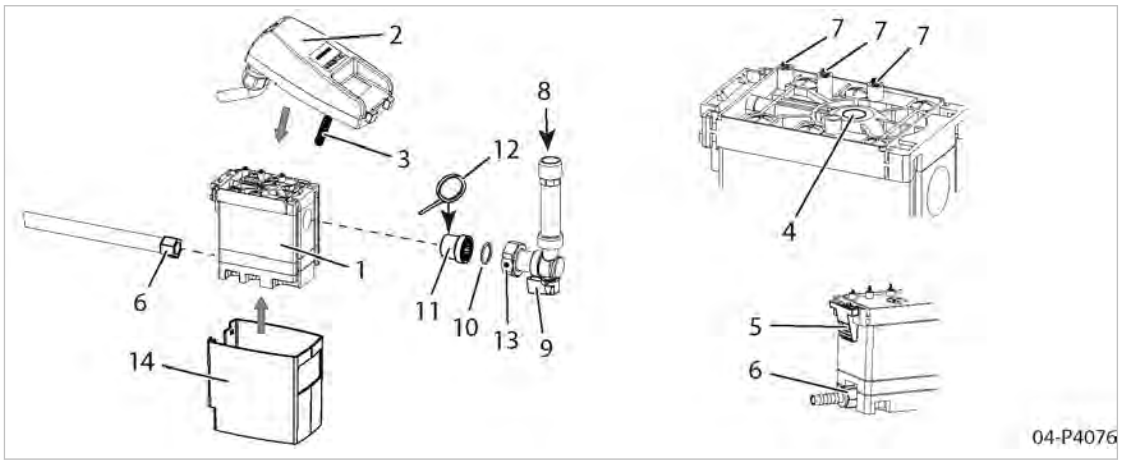


Fig. 53 Replacing the service unit

| | | | |
|---|---|---|---|
| 1 | Service unit | 8 | Condensate inlet |
| 2 | Control unit | 9 | Shut-off valve |
| 3 | Sensor | 10 | O-ring |
| 4 | Sensor opening | 11 | Screw-in part |
| 5 | Snap fastener | 12 | Sealing tape |
| 6 | Condensate line screw connection | 13 | Clamping nut with vent hole |
| 7 | Contact springs | 14 | Casing |

1. ⚠ WARNING *Serious injury can result from loosening or opening components under pressure!*
   ➤ *Fully vent all pressurized components and enclosures.*
2. Close the shut-off valve [9] upstream of the condensate drain.
3. Unscrew the screw connection [6] at the condensate line.
4. Press the snap fastener [5] and carefully remove the control unit [2] from the service unit [1].
5. Carefully loosen the clamping nut [13] at the shut-off valve [9] until remaining residual air has escaped through the venting hole.
6. Unscrew the screw-in part [11] from the service unit and place aside.
7. Remove the casing [14] from the service unit.

**Installing the service unit**

To ensure that the condensate drain functions correctly, use only KAESER service units.

Precondition Make sure that the top of the service unit and the contact springs are clean and dry.

1. Fit the casing [14] to the service unit [1].
2. Carefully insert the sensor [3] for the control unit [2] into the opening [4] on the service unit.
3. Insert the snap fastener [5] on the control unit into the eyes on the service unit.
4. Press the control unit against the service unit until the snap fastener can be heard clicking into place.
5. Replace old sealing material on the screw-in part [11] with new sealing tape.
6. Install the screw-in part into the service unit and tighten to a maximum of 15 lbf/ft.
7. If necessary, insert a new O-ring [10].
8. Tighten the clamping nut [13] on the shut-off valve [9].
9. Attach the condensate line.
10. Open the shut-off valve upstream of the condensate drain.

Further information Also note the installation instructions supplied with the service unit.

## 10.23 Option F14 Replacing the filter element

➤ To avoid damage, handle all components with care and install without the use of tools. This is particularly important when it comes to the frontal sealing surfaces.

⚠ The machine must be isolated from the compressed air network and completely vented before undertaking any work that entails opening the pressure system. Both network pressure gauges (initial and final pressure) read 0 psig.

Material KAESER filter element (including silicone-free sealing grease and O-ring)

Precondition The power supply disconnecting device is switched off,
lock out and tag out the device,
the absence of any voltage has been verified.

The machine has cooled down.

Fully vent all pressurized components and enclosures (see chapter 10.13).

### 10.23.1 Removing the filter element

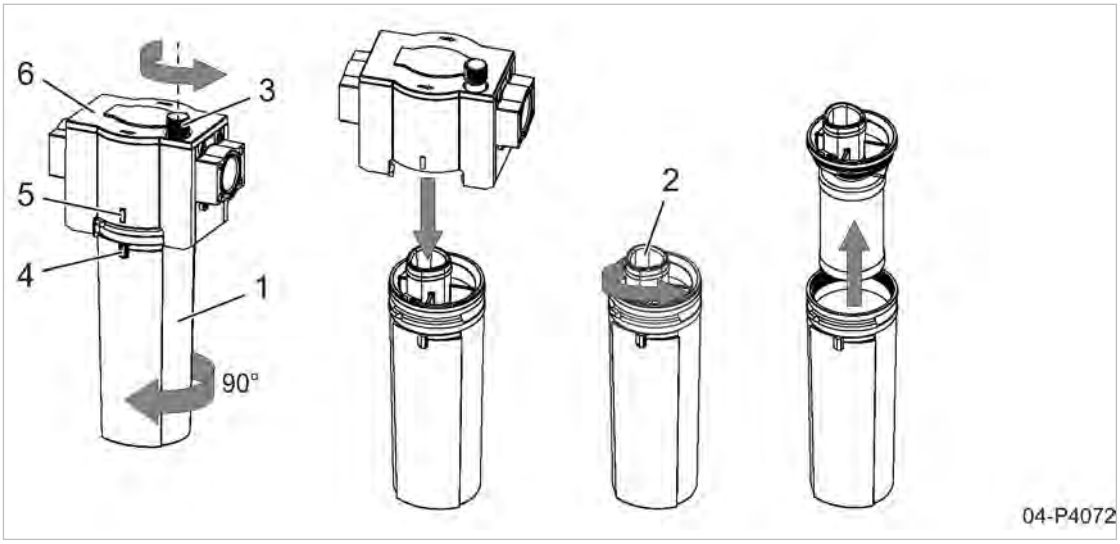


Fig. 54 Removing the filter element

| | | | |
|---|---|---|---|
| 1 | Filter housing | 4 | Installation mark on the filter housing |
| 2 | Filter element | 5 | Installation mark on the filter head |
| 3 | Locking screw (secured against complete removal) | 6 | Filter head |

1. **⚠ WARNING** *Risk of fatal injury from components under high pressure!*
   - ➤ *Isolate the machine from the compressed air network.*
   - ➤ *Vent the machine completely.*
   - ➤ *Verify the absence of pressure.*
2. Loosen the locking screw 3 by hand until you can feel resistance again.
   If the compressed air filter was pressurized, the residual compressed air will escape.

If you can hear a continuous whistling sound:
The compressed air filter remains under pressure!
- ➤ Disconnect the compressed air filter from the compressed air network, or vent the entire network.

3. Jiggle the filter housing 1 gently and then rotate by 90° until the installation marks on the filter housing 4 and the filter head 5 are facing one another.
4. Remove the filter housing together with the screwed-in filter element vertically downwards.
5. Unscrew the filter element 2 from the filter housing (approx. 1 1/2 rotations required).
6. If required: Drain and dispose of any condensate.
7. Check the filter housing for corrosion.

If the filter housing is noticeably corroded:
- ➤ Determine the cause (e.g. composition of the compressed air, prevailing operating conditions)
- ➤ Completely replace the compressed air filter.

Dispose of the contaminated filter element in accordance with environmental regulations.

### 10.23.2 Installing the filter element

➤ Do not touch the surface of the filter material with your hand.

Precondition The inner surfaces of the filter head and the filter housing are clean.

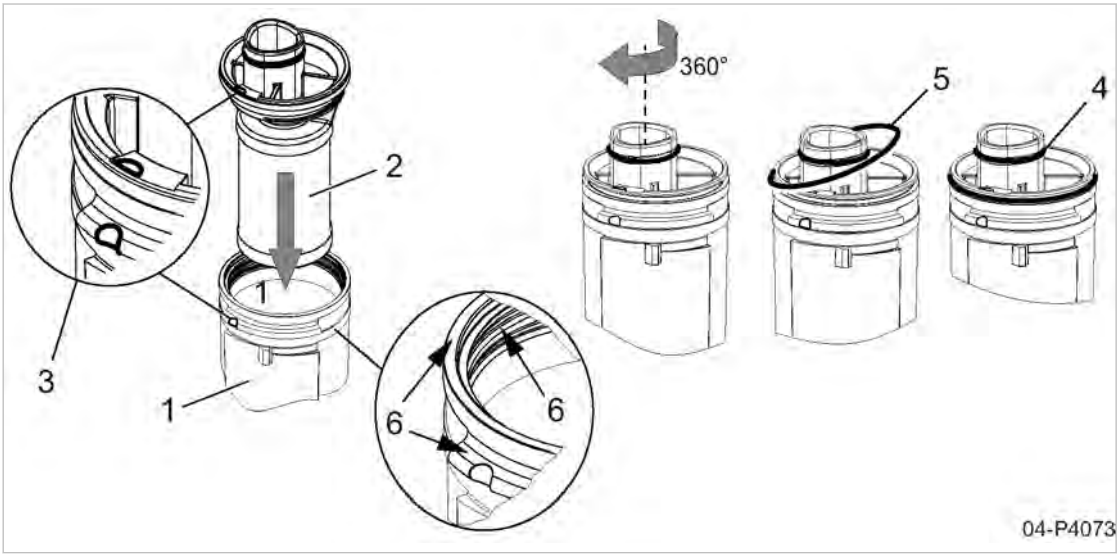


Fig. 55 Installing the filter element

| | | | |
|---|---|---|---|
| 1 | Filter housing | 4 | O-ring |
| 2 | Filter element | 5 | O-ring |
| 3 | Installation marks | 6 | Surface to be greased |

1. Grease the thread, front surface and bayonet catch of the filter housing (Pos. 6).
2. Push the filter element 2 into the filter housing 1 so that the installation marks 3 are aligned with one another.
3. Screw the filter element into the filter housing (one rotation required).
4. Fully grease the O-ring 5 and insert between the filter element and the filter housing.
5. Grease the O-ring 4.

### 10.23.3 Installing the filter housing

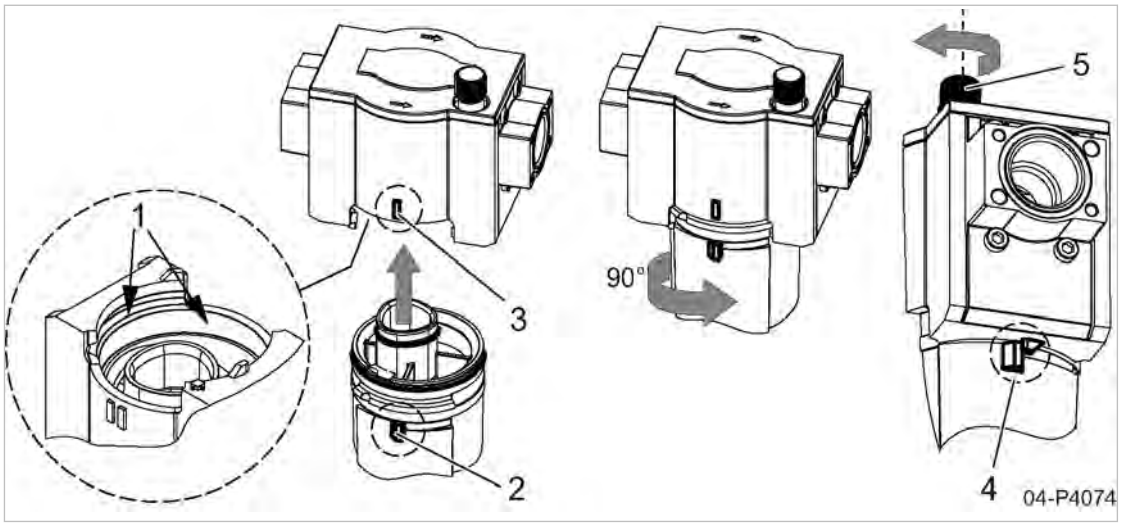


Fig. 56 Installing the filter housing

1. Surface to be greased
2. Installation mark on the filter housing
3. Installation mark on the filter head
4. Limit stop on the filter head
5. Locking screw

1. Grease the inner surface of the filter head (Pos. 1).
2. Align the installation marks (2 and 3) on the filter housing and head with one another.
3. Insert the filter housing into the filter head.
4. Rotate the filter housing through 90° as far as the limit stop 4.
5. Manually tighten the locking screw 5.

If the locking screw cannot be tightened:

The bayonet catch on the filter housing is not fully closed.

➤ Rotate the filter housing as far as the limit stop.

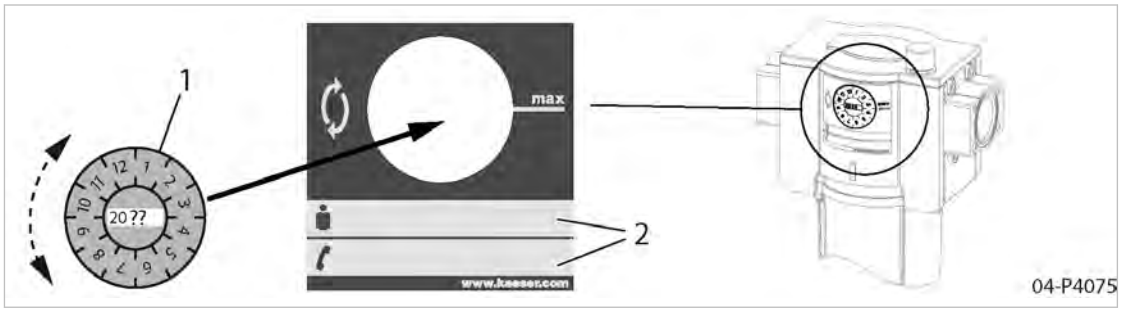


Fig. 57 Filling out the maintenance sticker

1. Maintenance sticker
2. Service contact information

6. Fill out the maintenance sticker with the year in which the next maintenance falls due.
7. Attach the maintenance sticker so that the *max* mark is pointing to the month in which the next maintenance falls due.

### 10.23.4 Pressurizing the compressed air filter

A high fluid flow rate may damage the filter material.

1. Check that the locking screw has been tightened properly by hand.
2. Slowly open the user-end shut-off valve (initial pressure).
3. Slowly open the user-end shut-off valve (final pressure).

## 10.24 Option K6 Electronic condensate drain

Accumulated condensate is removed via an electronic condensate drain

➤ Check the condensate drain regularly as described below and carry out maintenance as necessary.

### 10.24.1 Checking the condensate drain

The *Valve* LED illuminates as soon as the condensate begins to drain.

Precondition The machine is switched off.
The *Power* LED is illuminated.
The *Alarm* LED is not illuminated.
The machine has been run for a sufficient period in LOAD.

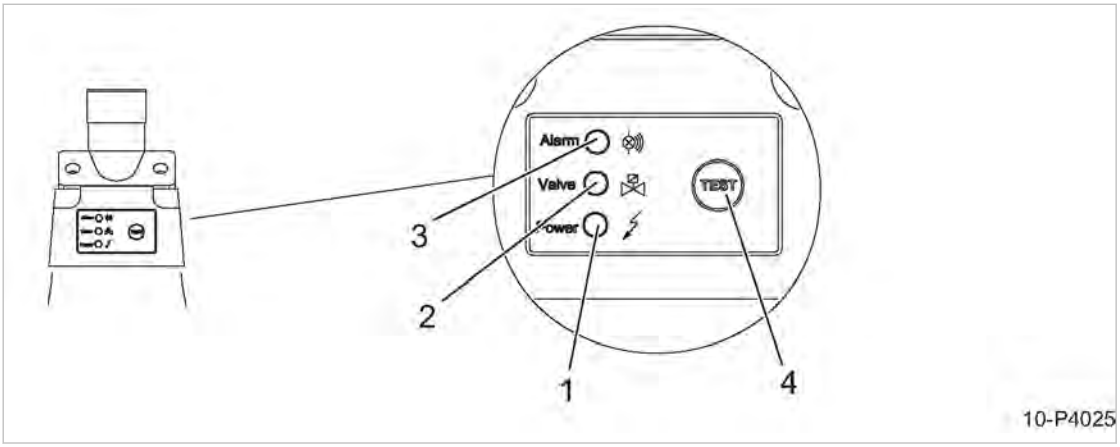


Fig. 58 Checking the condensate drain

| | | | |
|---|---|---|---|
| 1 | *Power* LED | 3 | *Alarm* LED |
| 2 | *Valve* LED | 4 | «TEST» key |

1. **⚠ CAUTION** *Danger of burns from hot components around the condensate drain!*
   ➤ *Proceed with caution.*
2. With one hand, lightly touch the condensate line on the condensate drain.
3. With your other hand, push and hold the «TEST» key on the condensate drain for at least 2 seconds.

Result As soon as the condensate drain opens, you will feel a short pressure surge in the condensate line.

If you do not feel any pressure surge during the manual test:

➤ Contact an authorized KAESER service representative.

### 10.24.2 Condensate drain maintenance

➤ Arrange for maintenance of the condensate drain to be carried out by an authorized KAESER service representative.

## 10.25 Drive belt maintenance

Use only KAESER V-belts. Each belt set has the same length and the belts are fully oil-resistant.

➤ V-belts must be changed as a set.

Material V-belt set

Precondition Cut-off the electrical power supply via the power supply disconnecting device,
ensure that the device is locked out and tagged out,
verify the absence of any voltage.

The machine has cooled down.

Vent all pressurized components and enclosures (see chapter 10.13).

**⚠ WARNING**

*Hand injury due to the machine running on!*

➤ *Wait for at least one minute after switching off before you open the panel.*

**Visual check for damage**

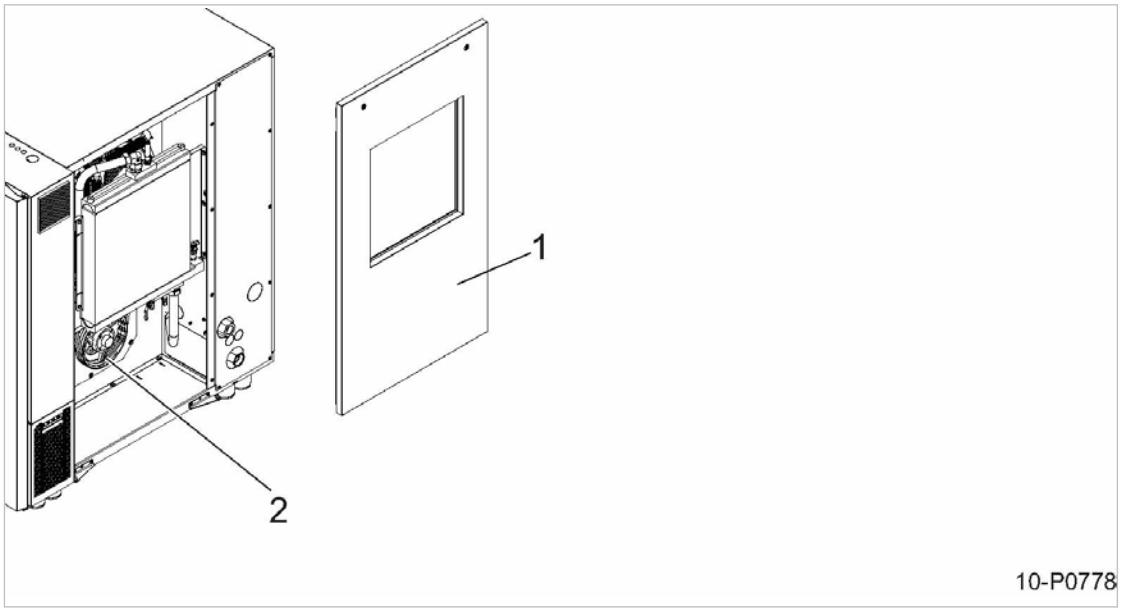


Fig. 59 Visual check for damage

1 Removable access panel
2 Motor pulley

1. Remove the panel.
2. Turn the drive belt by hand so that all of the belts can be inspected for damage.
3. In case of damage: Immediately have the drive belt replaced by KAESER SERVICE.

### Checking and adjusting belt tension

➤ Check the position of the locking pin.

The drive belts need re-tensioning if the locking pin is at the lower end of the slot.

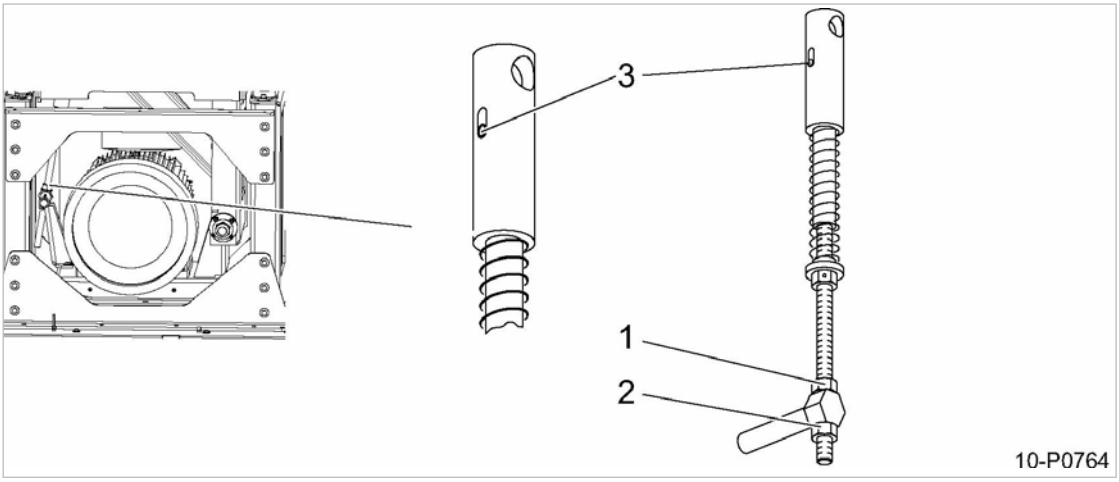


Fig. 60 Re-tighten the drive belt

1 Hexagon nut
2 Hexagon nut
3 Locking pin

1. Loosen the hexagon nut 1.
2. Screw down the hexagonal nut 2 until the pin is located at the upper end of the slot.
3. Tighten the hexagonal locking nut 1.

### Starting the machine and performing a trial run

1. Close all access doors, replace and secure all removable panels.
2. Open the user's inlet and discharge shut-off valves.
3. Close the shut-off valve at the cooler and network pressure gauge (inlet pressure).
4. Switch on the electrical power supply via the power supply disconnecting device and reset the maintenance interval counter.
5. Start the machine and run it for 2 minutes, then stop it and visually check it.

## 10.26 Cylinder head and valves

➤ Maintenance and service work on the cylinder head and valves should be performed *only* by an authorized KAESER service representative.

## 10.27 Documenting maintenance and service work

Machine number:

➤ Enter maintenance and service work carried out in the list.

| Date | Maintenance task carried out | Operating hours | Signature |
|---|---|---|---|
| | | | |
| | | | |
| | | | |
| | | | |
| | | | |
| | | | |
| | | | |
| | | | |
| | | | |
| | | | |
| | | | |
| | | | |
| | | | |
| | | | |
| | | | |
| | | | |
| | | | |
| | | | |
| | | | |
| | | | |
| | | | |
| | | | |
| | | | |
| | | | |
| | | | |
| | | | |
| | | | |
| | | | |
| | | | |
| | | | |
| | | | |
| | | | |

Tab. 53 Logged maintenance tasks

# 11 Spares, Operating Materials, Service

## 11.1 Note the nameplate

The nameplate contains all information to identify your machine. This information is essential to us in order to provide you with optimal service.

➤ Please give the information from the nameplate with every inquiry and order for spares.

## 11.2 Ordering consumable parts and operating fluids/materials

KAESER consumable parts and operating fluids/materials are genuine parts. They are specifically designed for use in KAESER machines.
Unsuitable or poor-quality consumable parts and operating fluids/materials may result in damage to the machine or significantly impair its proper function.
Damage can result in injury to personnel.

**⚠ WARNING**

*Risk of personal injury or damage to the machine resulting from the use of unsuitable spare parts or operating fluids/materials!*

➤ *Only use genuine parts and operating fluids/materials.*

➤ *Arrange for an authorized KAESER service representative to carry out regular maintenance.*

**Machine**

| Designation | Number |
|---|---|
| Air filter insert | 1250 |
| Oil filter | 1200 |
| Housing ventilation filter | 1570 |
| Drive belt | 1800 |
| Filter mat (control cabinet bottom) | 1100 |
| Filter mat (control cabinet top) | 1102 |
| Compressor oil | 1600 |
| Service unit<br>Condensate drain (Option F14) | 9602 |
| Filter element (Option F14) | 1550 |

Tab. 54 Machine maintenance parts

## 11.3 KAESER AIR SERVICE

KAESER AIR SERVICE offers:

- authorized KAESER service representatives with KAESER factory training,
- increased operational reliability ensured by preventive maintenance,
- energy savings achieved by avoidance of pressure losses,
- optimum conditions for operation of the compressed air system,

- the security of genuine KAESER spare parts,
- increased legal certainty as all regulations are kept to.

➤ Why not sign a KAESER AIR SERVICE maintenance agreement!

Result Your advantage:
lower costs and higher compressed air availability.

## 11.4 Spare parts for service and repair

Use these parts lists to plan your material requirement according to operating conditions and to order the required spare parts.

➤ Make sure that any service or repair tasks not described in this manual are carried out by an authorized KAESER service representative.

### 11.4.1 Spare parts option K1 (air cooling)

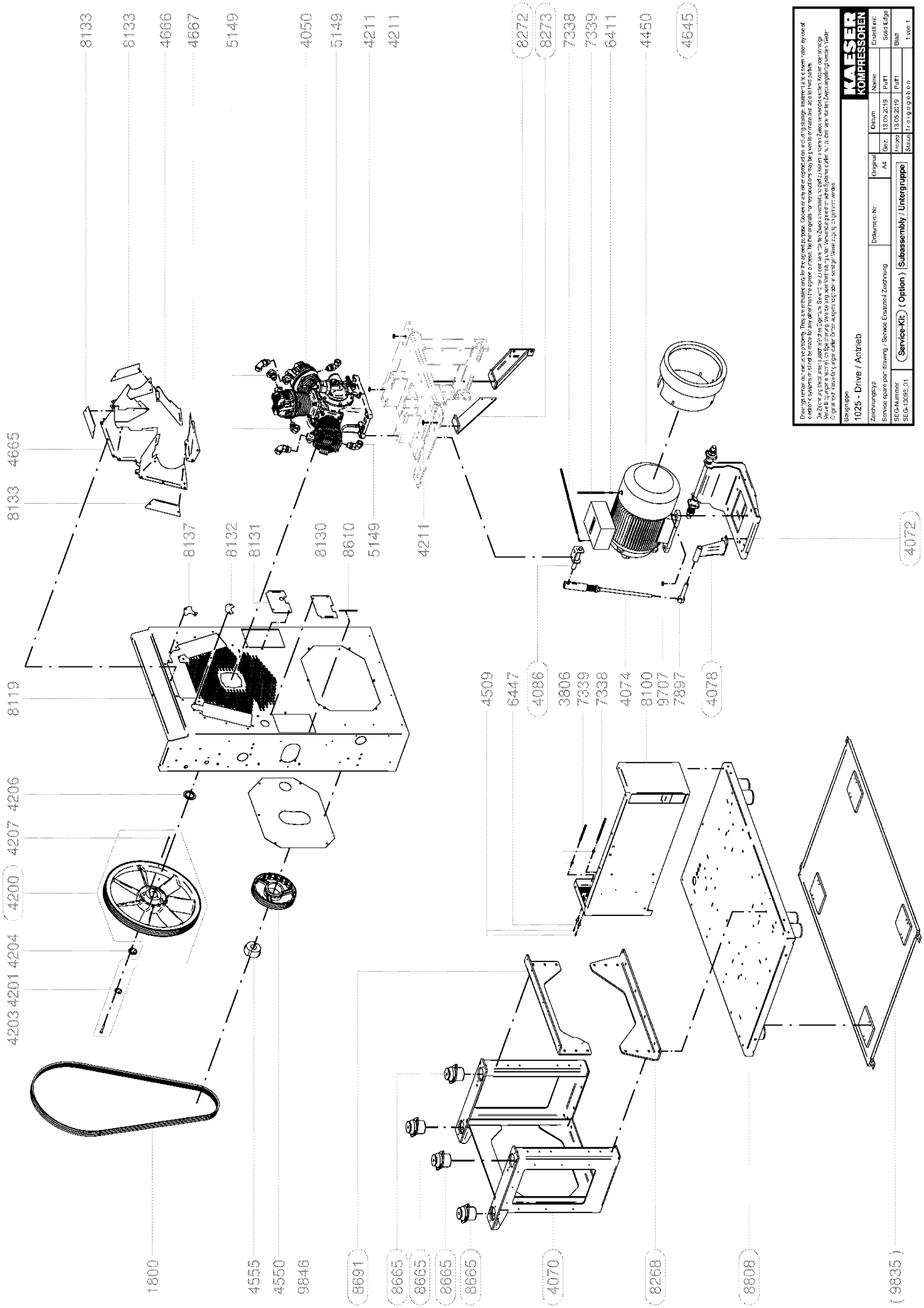
8133
8133
4666
4667
5149
4050
5149
4211
4211
8272
8273
7338
7339
6411
4450
4645
4665
8133
8137
8132
8131
8130
8610
5149
4211
4072
8119
4509
6447
4086
3806
7339
7338
4074
8100
9707
7897
4078
4206
4207
4200
4204
4201
4203
1800
4555
4550
9846
8691
8665
8665
8665
8665
4070
8268
8808
9835
KAESER KOMPRESSOREN
Gesamtgruppe
1025 - Drive / Antrieb
Service spare parts drawing / Service Ersatzteil Zeichnung
Service-Kit
( Option )
Subassembly / Untergruppe
Datum
13.05.2019
Name
Erstellt von:
Solid Edge
Status
freigegeben
1 von 1

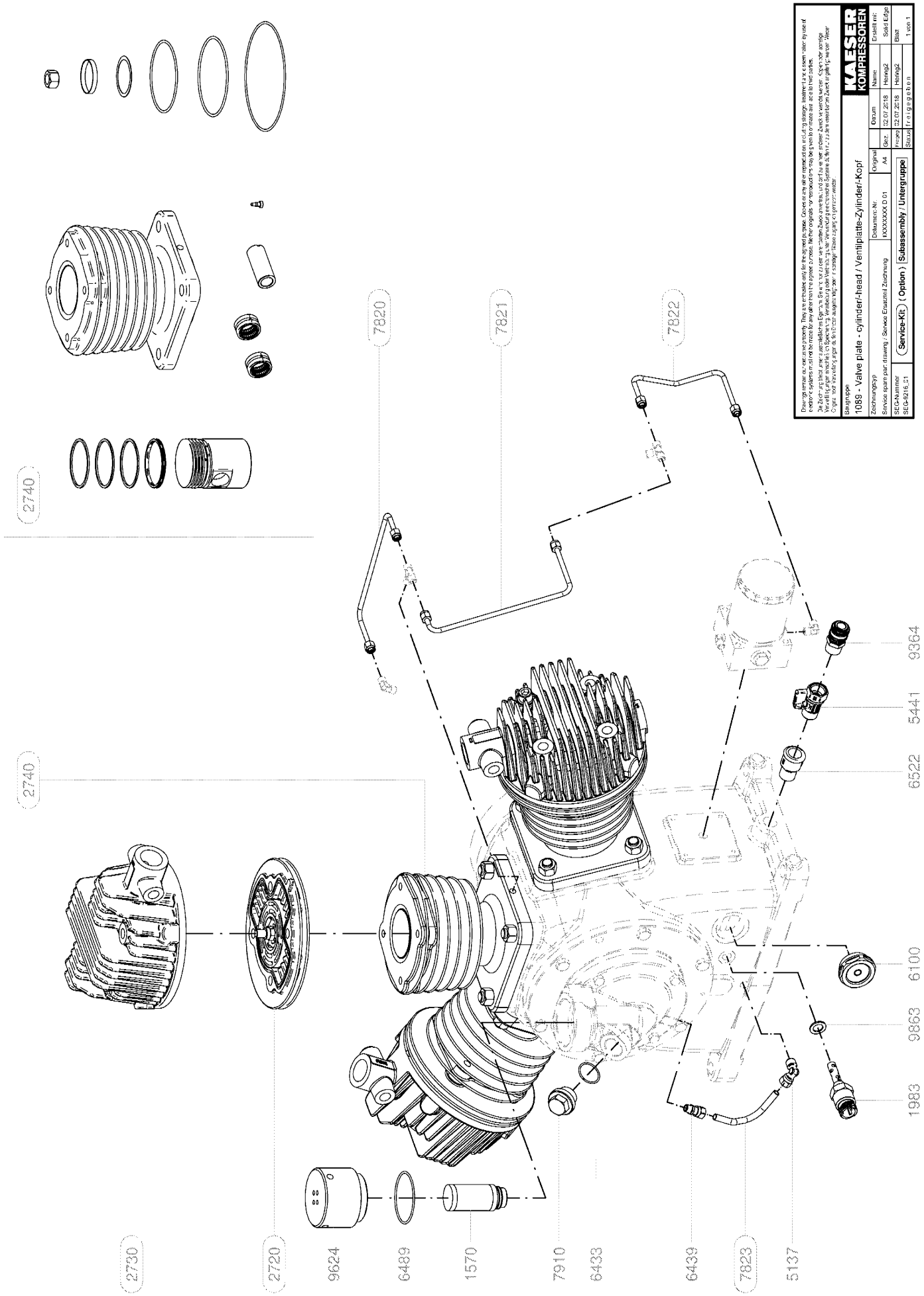
2740
7820
7821
7822
2740
9364
5441
6522
6100
9863
1983
2730
2720
9624
6489
1570
7910
6433
6439
7823
5137
Baugruppe
1089 - Valve plate - cylinder/-head / Ventilplatte-Zylinder/-Kopf
Zeichnungstyp
Service spare part drawing / Service Ersatzteil Zeichnung
Dokument-Nr.
XXXXXXXX D 01
Original
A4
Datum
Name
Erstellt mit:
Solid Edge
SEG-Nummer
SEG-0216.01
Service-Kit
( Option )
Subassembly / Untergruppe
KAESER KOMPRESSOREN

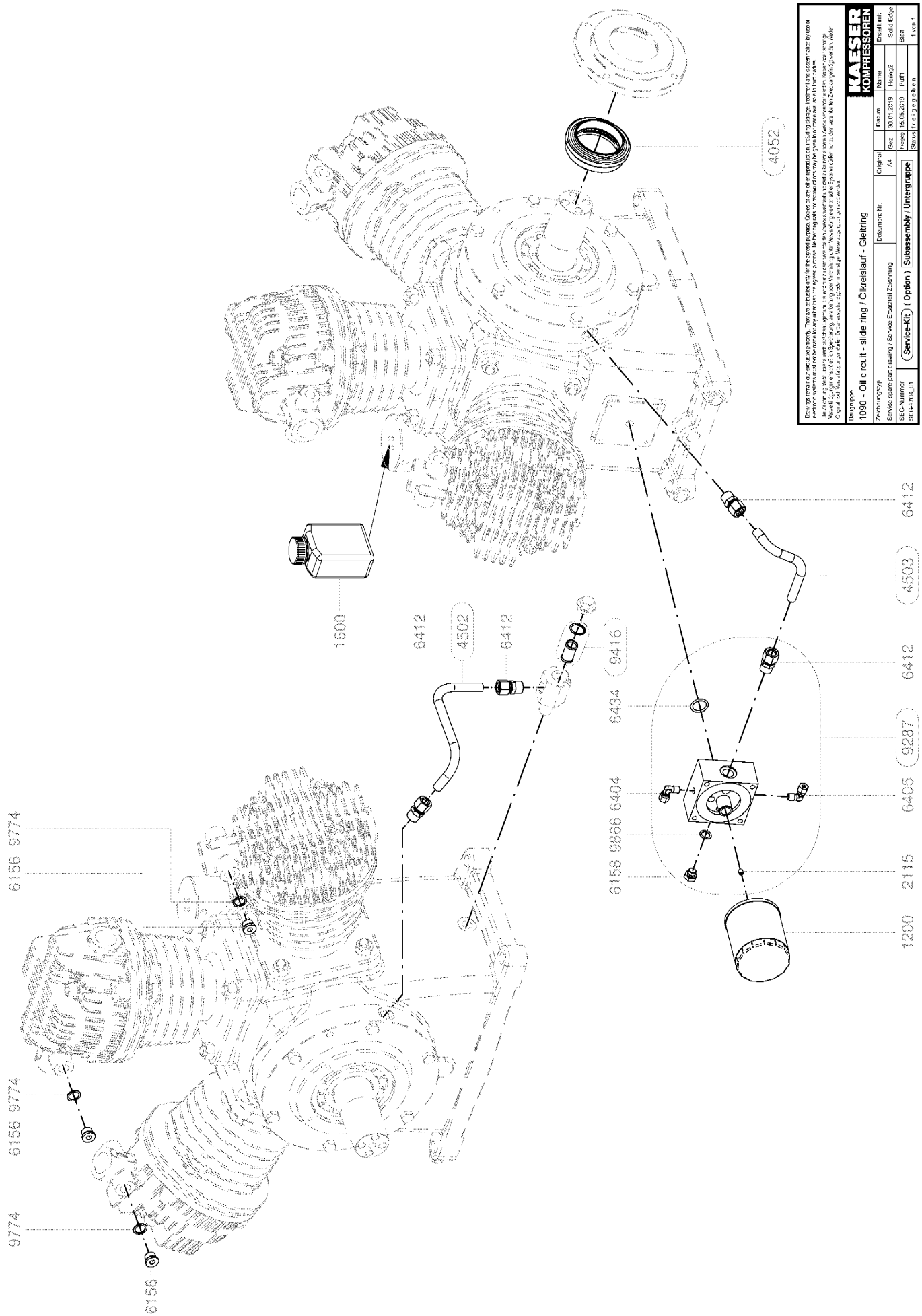
1600
6412
4502
6412
9416
6434
6158 9866 6404
6156 9774
6156 9774
9774
6156
4052
6412
4503
6412
9287
6405
2115
1200
Baugruppe
1090 - Oil circuit - slide ring / Ölkreislauf - Gleitring
Service-Kit
( Option )
Subassembly / Untergruppe
KAESER KOMPRESSOREN

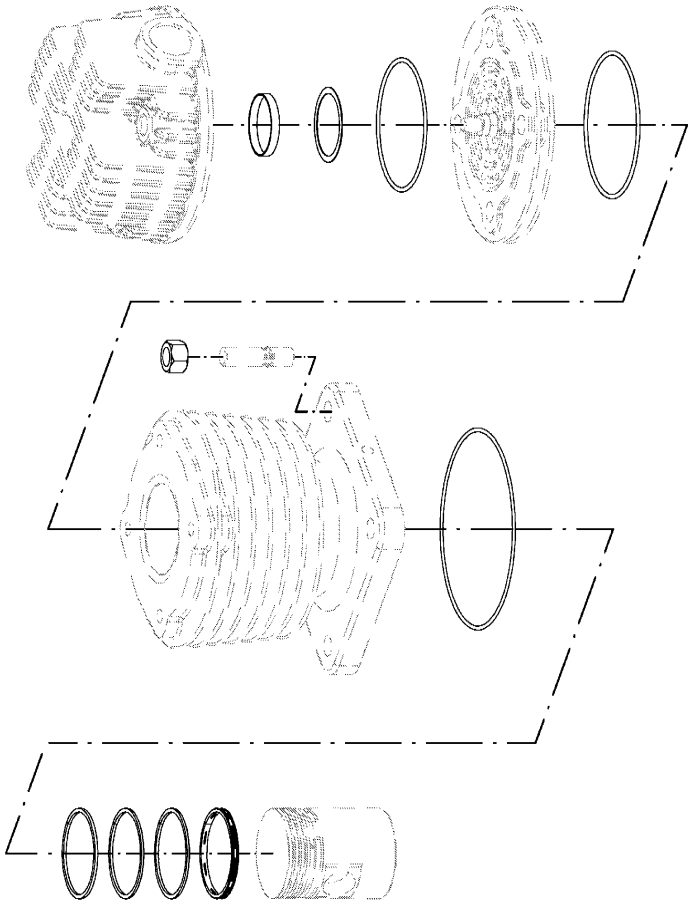

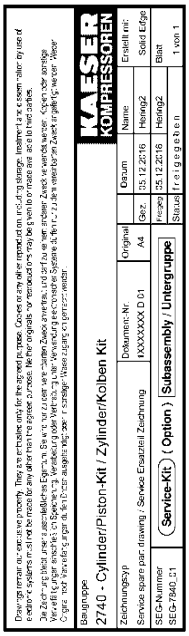
Baugruppe
2740 - Cylinder/Piston-Kit / Zylinder/Kolben Kit
Zeichnungstyp
Service spare part drawing / Service Ersatzteil Zeichnung
Dokument-Nr.
XXXXXXXX D 01
Original
A4
Datum
Name
Erstellt mit:
Solid Edge
SEG-Nummer
SEG-7940_01
Service-Kit
( Option )
Subassembly / Untergruppe
Blatt
1 von 1

2744

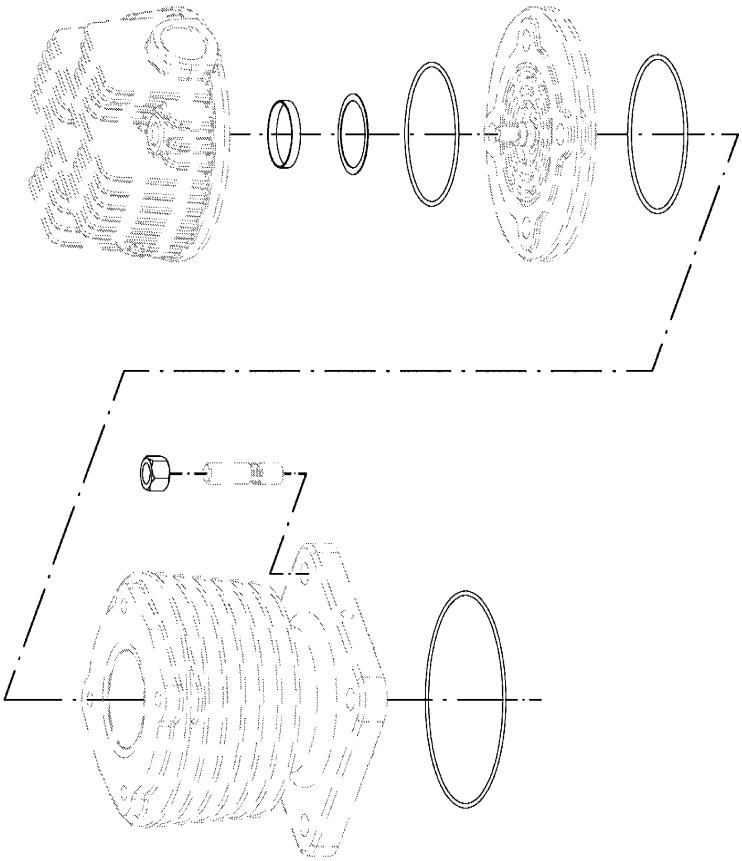

2710

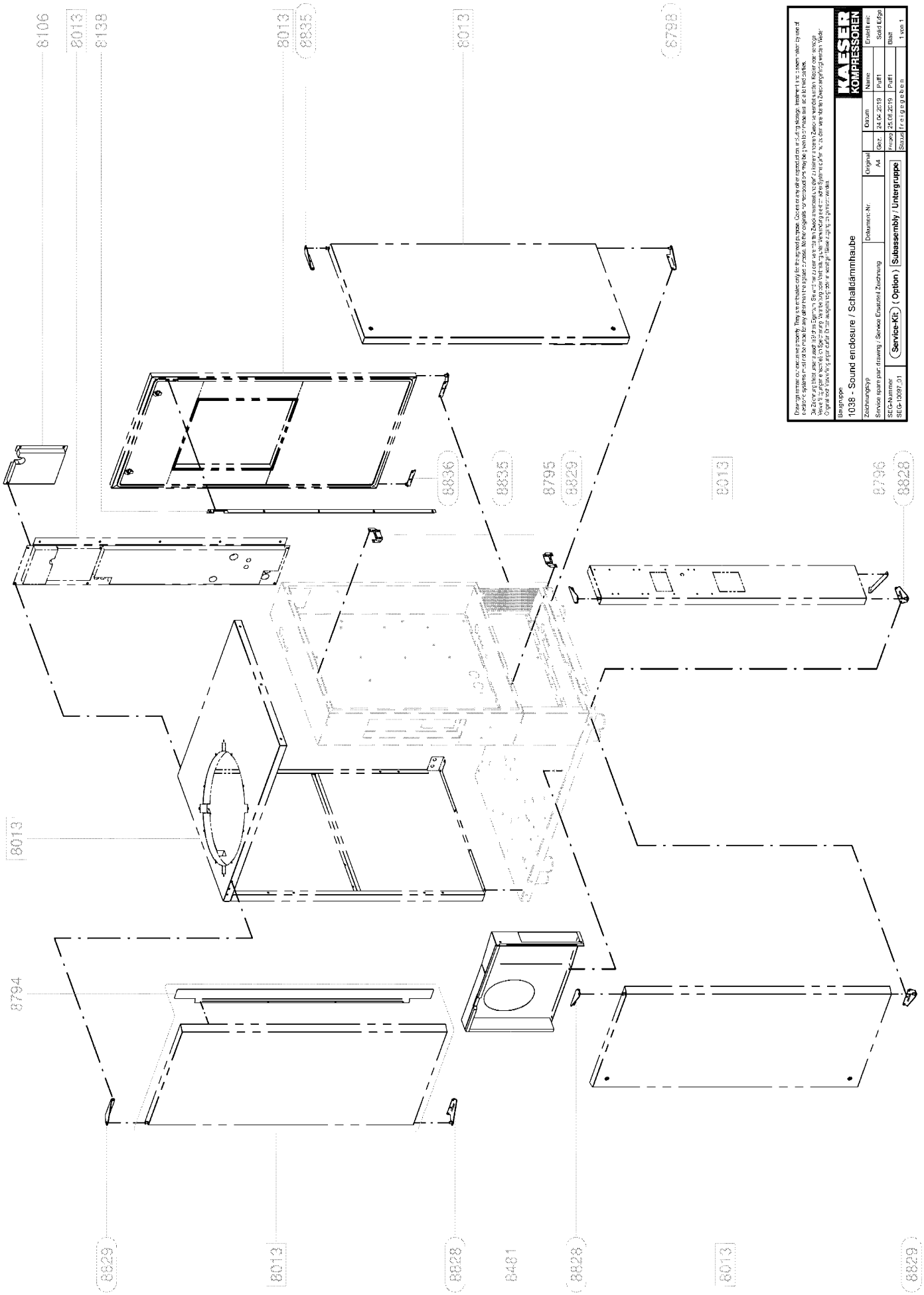
8106
8013
8138
8013
8835
8013
8798
8836
8835
8795
8829
8013
8796
8828
8013
8794
8829
8013
8828
8481
8828
8013
8829
Baugruppe
1038 - Sound enclosure / Schalldämmhaube
Zeichnungstyp
Service spare parts drawing / Service Ersatzteil Zeichnung
Dokument-Nr.
Original
A4
Datum
24.04.2019
Name
Pulfl
Erstellt mit:
Solid Edge
SEG-Nummer
SEG-10097_01
Service-Kit
( Option )
Subassembly / Untergruppe
Freigegeben
25.06.2019
Pulfl
Blatt
1 von 1
Status

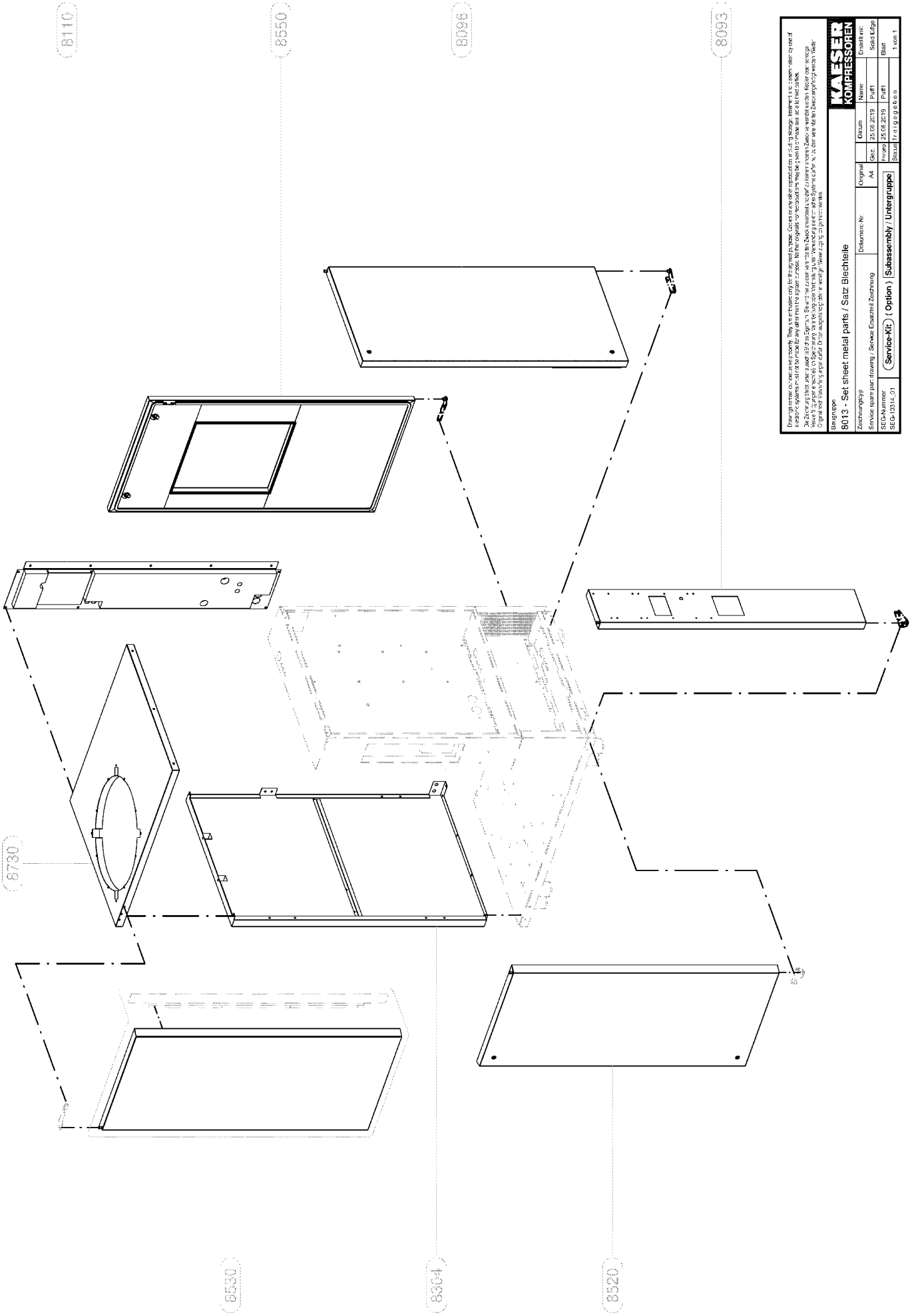
8110
8550
8096
8093
8730
8530
8304
8520
KAESER KOMPRESSOREN
Baugruppe
8013 - Set sheet metal parts / Satz Blechteile
Zeichnungstyp
Service spare part drawing / Service Ersatzteil Zeichnung
Dokument-Nr:
Original
A4
Gez.
Datum
25.06.2019
Name:
Puff1
Ersetzt nr:
Solid Edge
Krgeg.
25.06.2019
Puff1
Blatt
1 von 1
SEG-Nummer
SEG-10314_01
Service-Kit
( Option )
Subassembly / Untergruppe
Status
Freigegeben

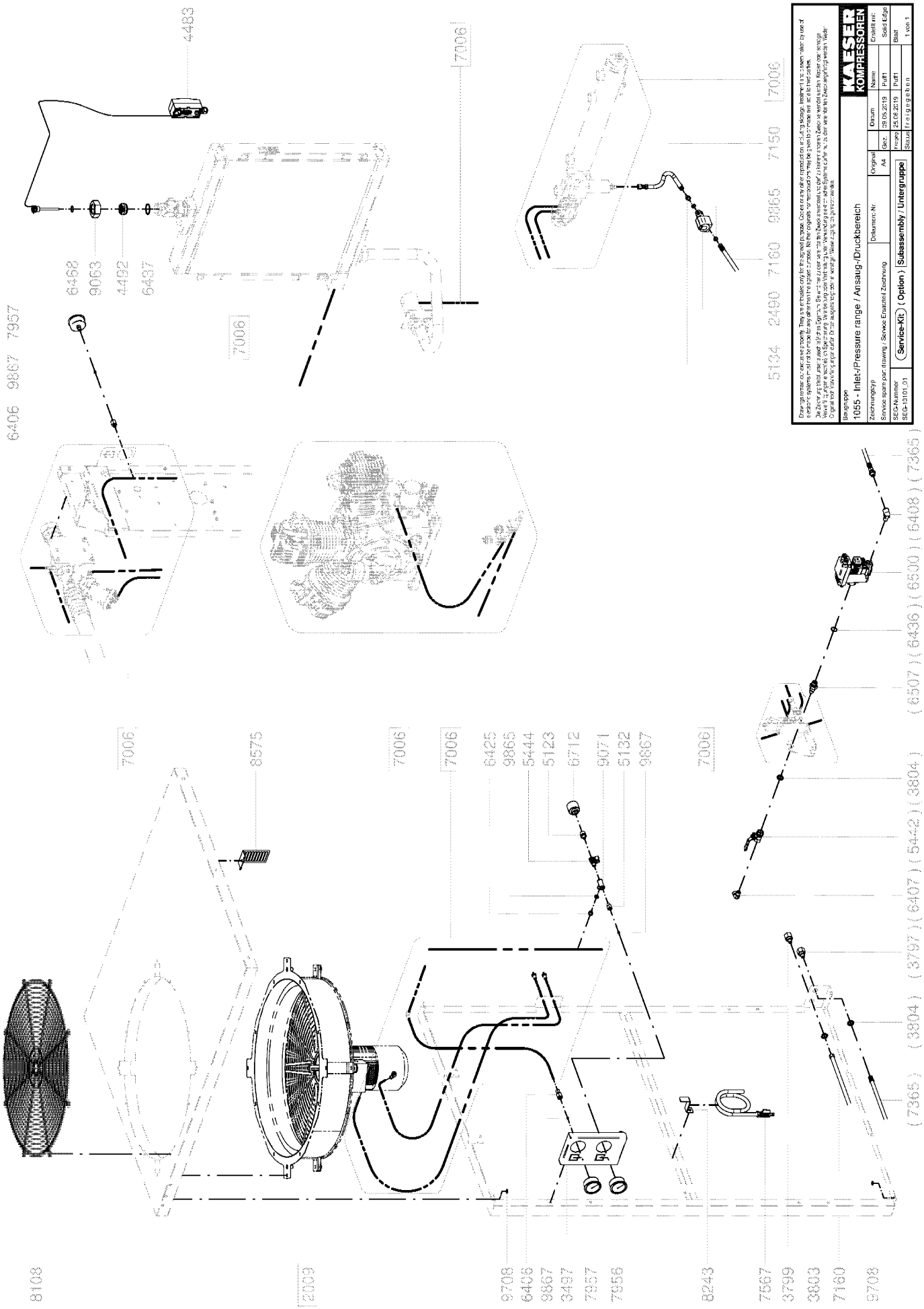
4483
7006
6468
9063
4492
6437
7957
9867
6406
7006
5134
2490
7160
9865
7150
7006
7006
8575
7006
7006
6425
9865
5444
5123
6712
9071
5132
9867
7006
( 7365 )
( 3804 )
( 3797 )
( 6407 )
( 5442 )
( 3804 )
( 6507 )
( 6436 )
( 6500 )
( 6408 )
( 7365 )
8108
2009
9708
6406
9867
3497
7957
7956
8243
7567
3799
3803
7160
9708
KAESER KOMPRESSOREN
Baugruppe
1055 - Inlet-/Pressure range / Ansaug-/Druckbereich
Zeichnungstyp
Dokument-Nr.
Original A4
Datum
Name
Erstellt mit:
Service spare parts drawing / Service Ersatzteil Zeichnung
Skz.
28.05.2019
Prüft
Solid Edge
SEG-Nummer
SEG-D1001_01
Service-Kit
( Option )
Subassembly / Untergruppe
Freigab
25.06.2019
Prüft
Blatt
Status
freigegeben
1 von 1

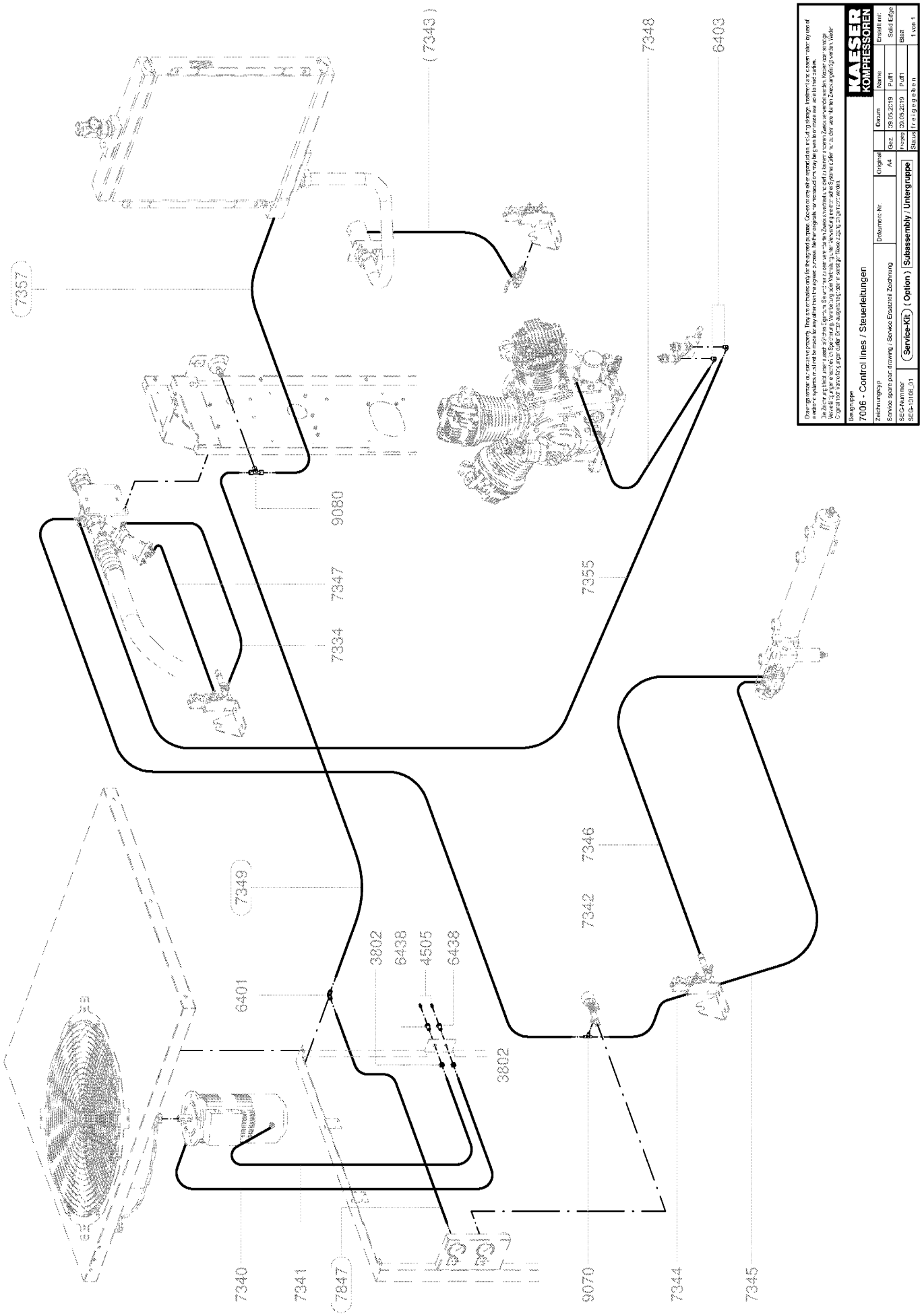
7343
7348
6403
7357
9080
7347
7334
7355
7346
7342
7349
6401
3802
6438
4505
6438
3802
7340
7341
7847
9070
7344
7345
Baugruppe
7006 - Control lines / Steuerleitungen
Zeichnungstyp
Service spare part drawing / Service Ersatzteil Zeichnung
SEG-Nummer
SEG-13108_01
Service-Kit
( Option )
Subassembly / Untergruppe
Dokument-Nr:
Original
A4
Datum
Name:
Ersetzt nr:
Solid Edge
Blatt
1 von 1
KAESER KOMPRESSOREN

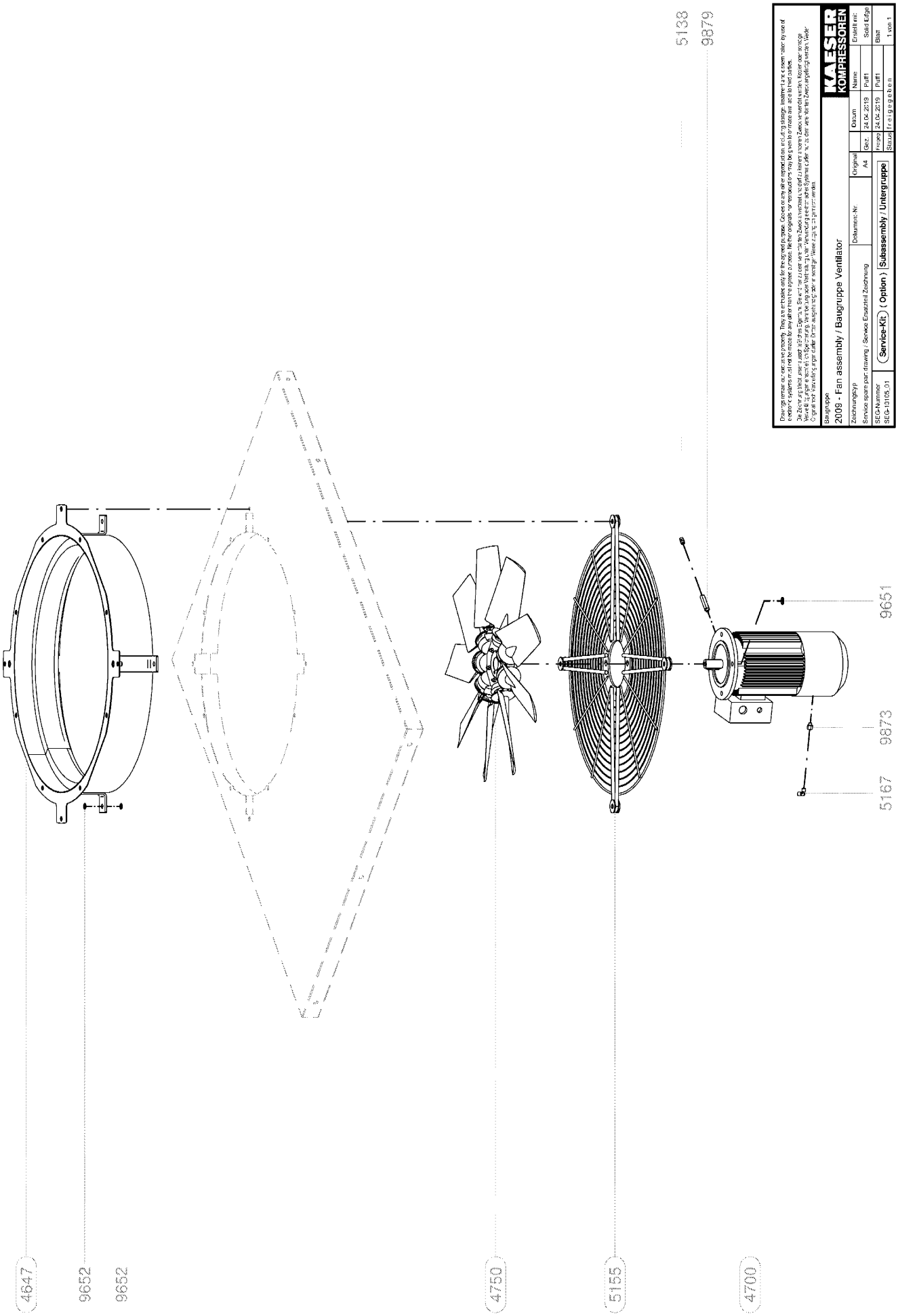
4647
9652
9652
4750
5155
4700
5167
9873
9651
5138
9879
Baugruppe
2009 - Fan assembly / Baugruppe Ventilator
Zeichnungstyp
Service spare part drawing / Service Ersatzteil Zeichnung
Dokument-Nr.
Original
A4
Datum
24.04.2019
Name
Prüft
Erstellt mit:
Solid Edge
SEG-Nummer
SEG-D3105_01
Service-Kit
( Option )
Subassembly / Untergruppe
Freigegeben
Blatt
1 von 1
KAESER KOMPRESSOREN

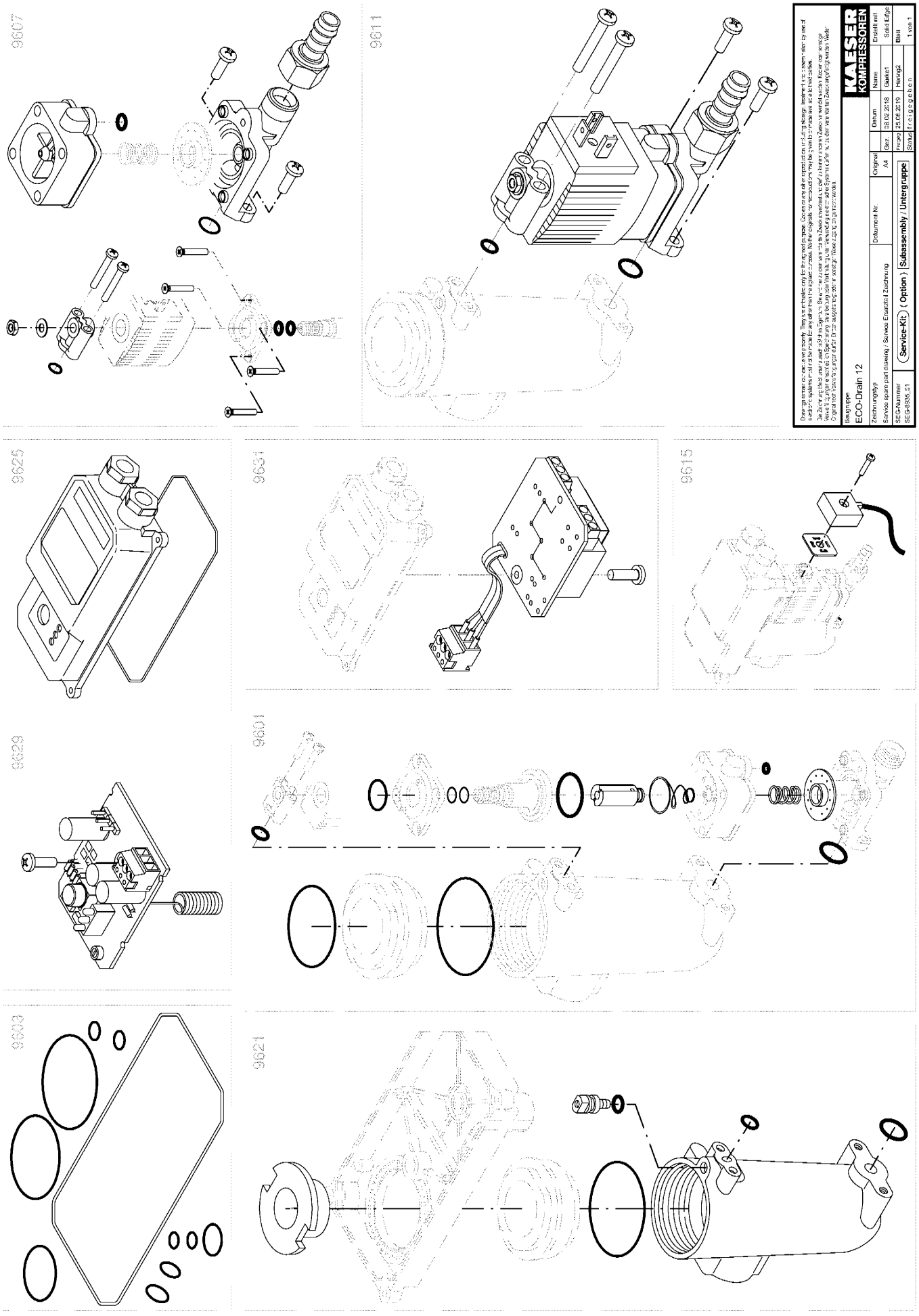
9607
9611
9625
9631
9615
9629
9601
9603
9621
Baugruppe
ECO-Drain 12
Zeichnungstyp
Service spare part drawing / Service Ersatzteil Zeichnung
Dokument-Nr.
Original
A4
Datum
Name
Ersetzt mit
Gez.
18.02.2018
Gauke1
Solid Edge
Freigegeben
25.06.2019
Heinig2
Blatt
1 von 1
Status
Freigegeben
SEG-Nummer
SEG-8935.01
Service-Kit
( Option )
Subassembly / Untergruppe
KAESER KOMPRESSOREN

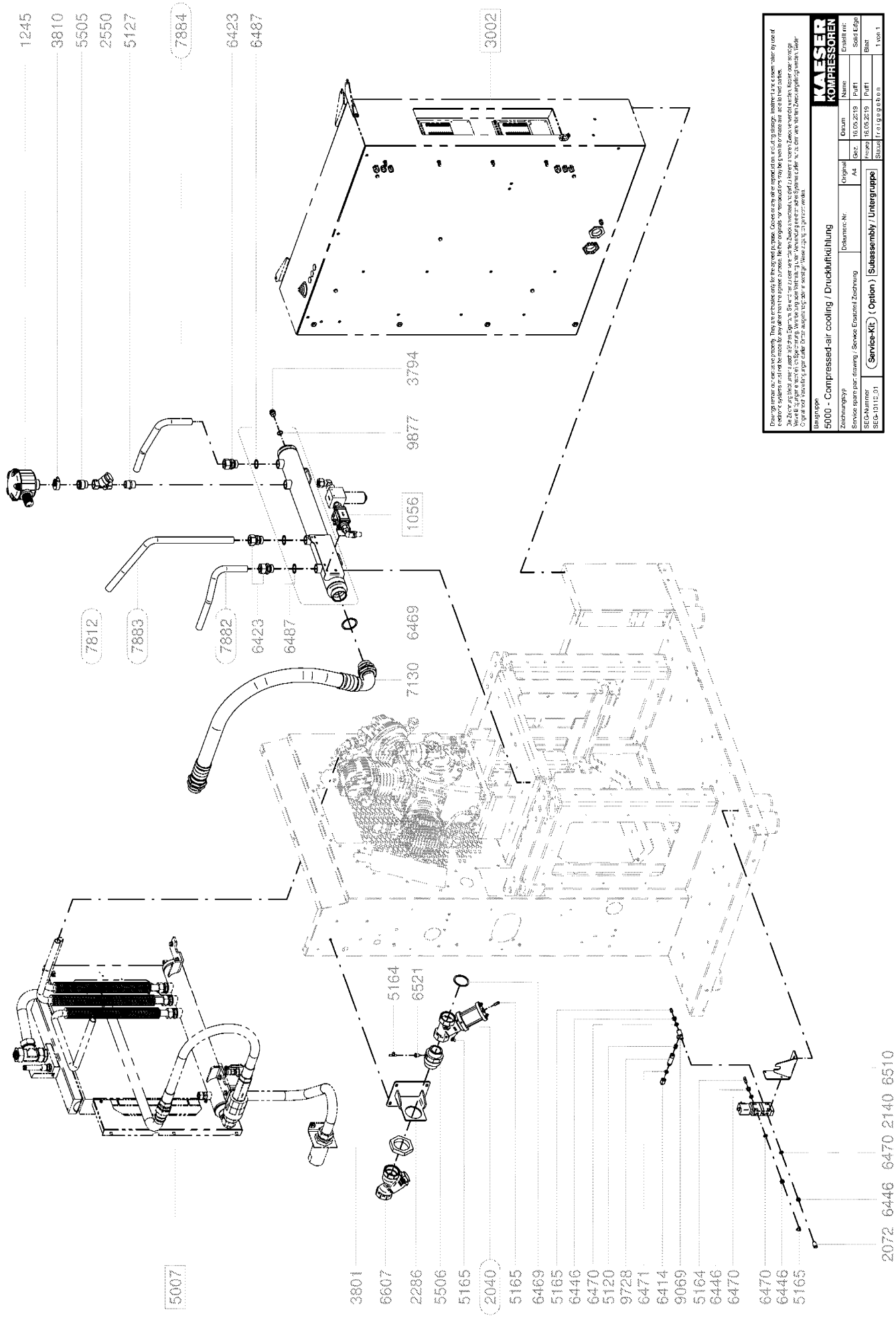
1245
3810
5505
2550
5127
7884
6423
6487
3002
3794
9877
1056
7812
7883
7882
6423
6487
6469
7130
5164
6521
5007
3801
6607
2286
5506
5165
2040
5165
6469
5165
6446
6470
5120
9728
6471
6414
9069
5164
6446
6470
6470
6446
5165
2072
6446
6470
2140
6510
KAESER KOMPRESSOREN
Baugruppe
5000 - Compressed-air cooling / Druckluftkühlung
Zeichnungstyp
Service spare parts drawing / Service, Ersatzteil Zeichnung
Dokument-Nr.
Original
A4
Datum
16.05.2019
Name
Pfaff
Erstellt mit:
Solid Edge
SEG-Nummer
SEG-10110_01
Service-Kit ( Option ) Subassembly / Untergruppe
Freigegeben
Blatt
1 von 1

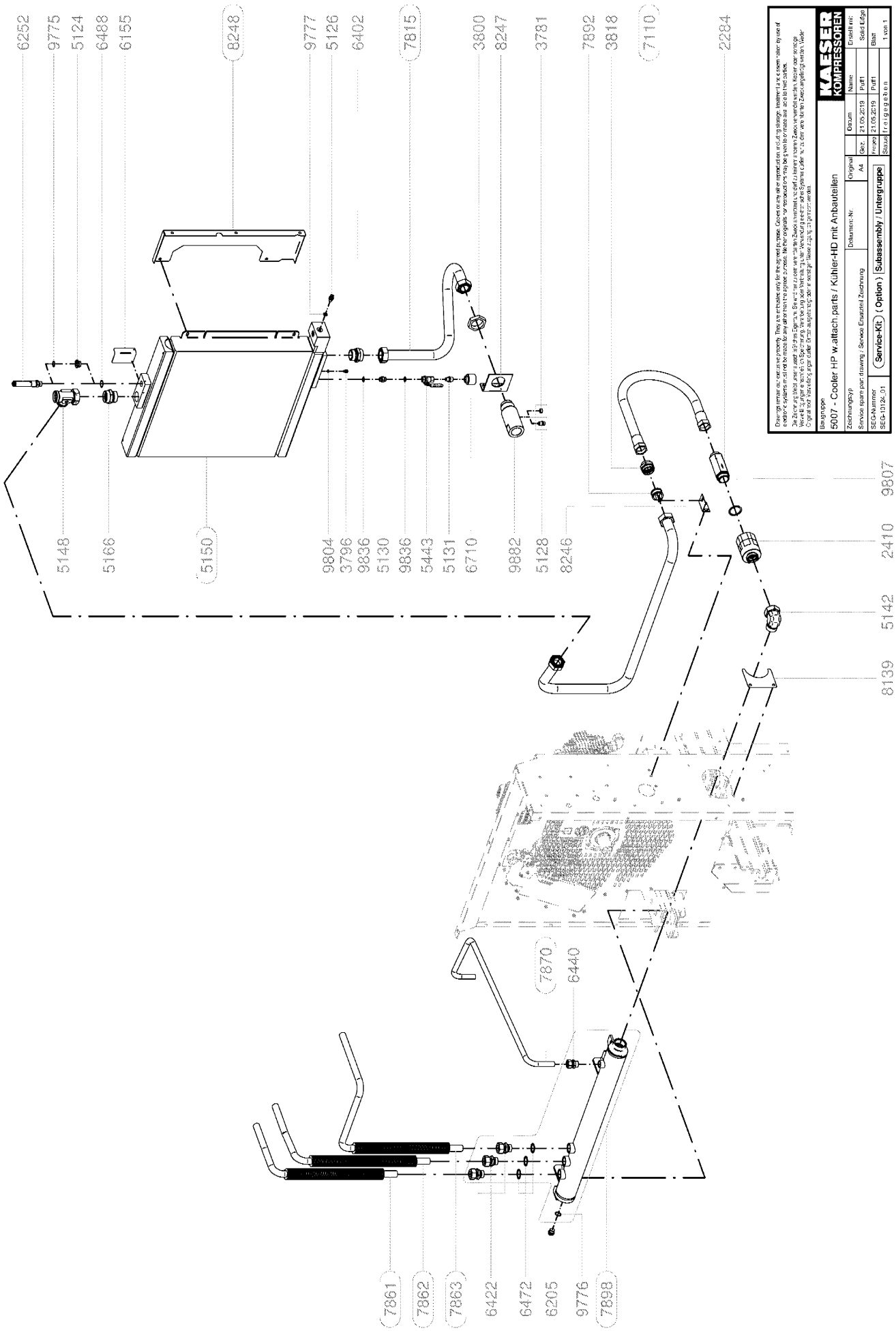
6252
9775
5124
6488
6155
8248
9777
5126
6402
7815
3800
8247
3781
7892
3818
7110
2284
9807
2410
5142
8139
5148
5166
5150
9804
3796
9836
5130
9836
5443
5131
6710
9882
5128
8246
7870
6440
7861
7862
7863
6422
6472
6205
9776
7898
Baugruppe
5007 - Cooler HP w.attach.parts / Kühler-HD mit Anbauteilen
Zeichnungstyp
Service spare part drawing / Service Ersatzteil Zeichnung
SEG-Nummer
SEG-19124_01
Service-Kit
( Option )
Subassembly / Untergruppe
Dokument-Nr:
Original
A4
Gez.
Datum
21.05.2019
Name
Puff1
Erstellt mit:
Solid Edge
Blatt
1 von 1
KAESER KOMPRESSOREN

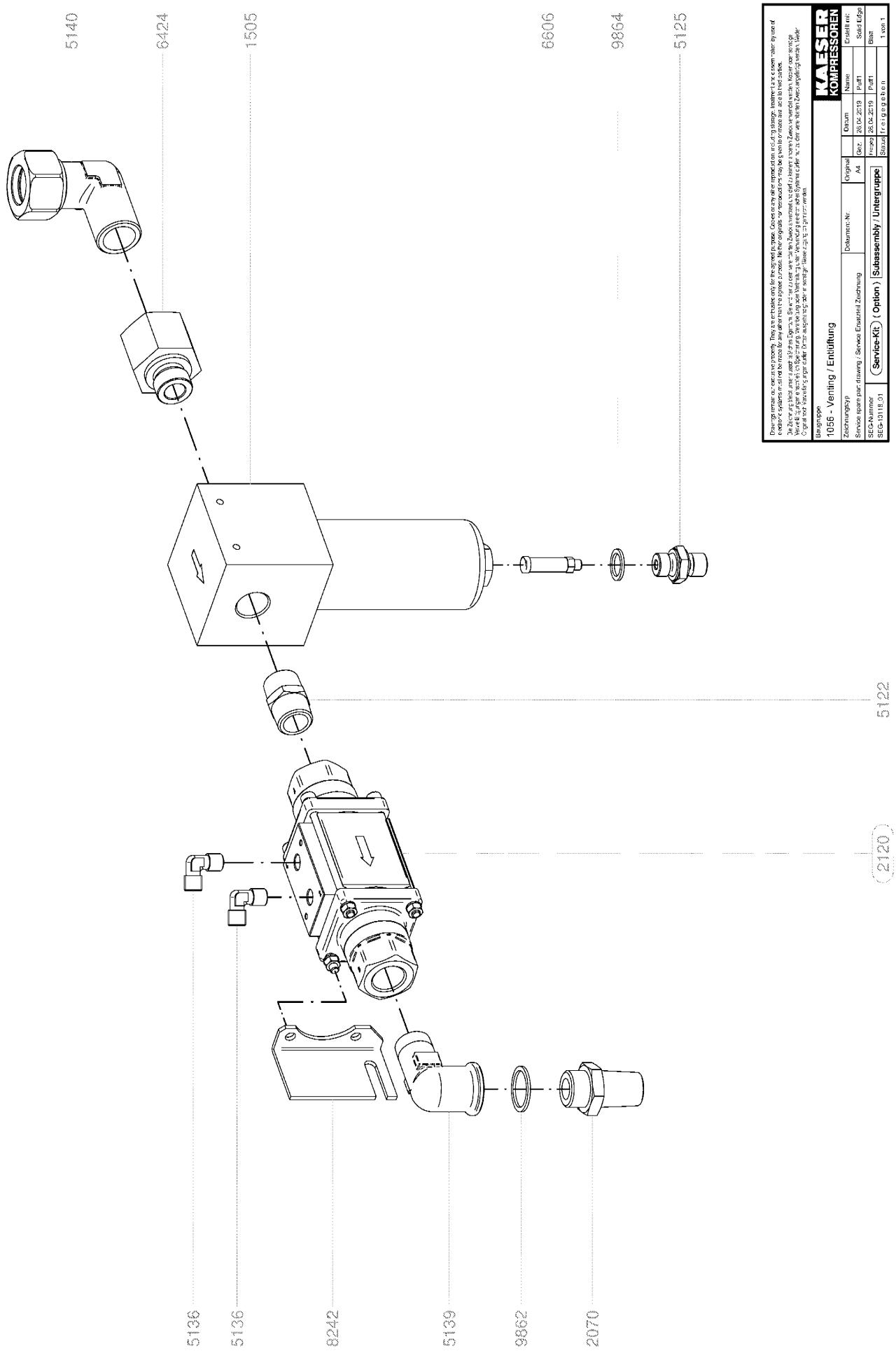
5140
6424
1505
6606
9864
5125
5122
2120
5136
5136
8242
5139
9862
2070
Baugruppe
1056 - Venting / Entlüftung
Zeichnungstyp
Service spare parts drawing / Service Ersatzteil Zeichnung
Dokument-Nr.
Original
A4
Datum
26.04.2019
Name
Erstellt von:
Solid Edge
Prüfer
Blatt
1 von 1
SEG-Nummer
SEG-13118_01
Service-Kit ( Option ) Subassembly / Untergruppe
Freigegeben

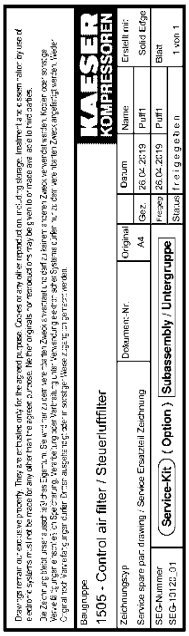
Baugruppe
1505 - Control air filter / Steuerluftfilter
Zeichnungstyp
Service spare part drawing / Service Ersatzteil Zeichnung
SEG-Nummer
SEG-10122.01
Service-Kit
( Option )
Subassembly / Untergruppe
Dokument-Nr:
Original
A4
Gez.
Krgep.
Datum
26.02.2019
26.02.2019
Name:
Puff1
Puff1
Erstellt mit:
Solid Edge
Blatt
1 von 1
KAESER KOMPRESSOREN

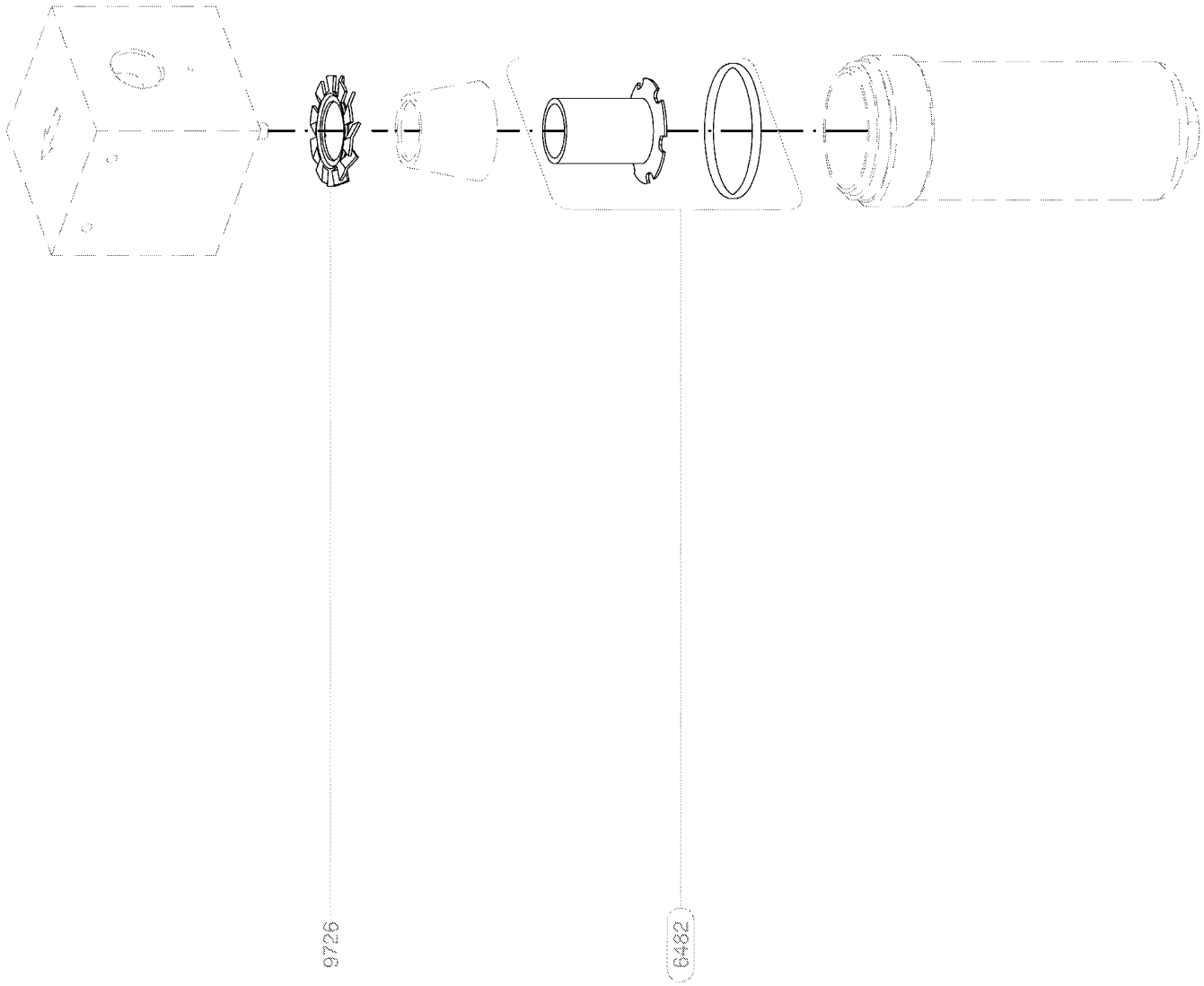
9726
6482

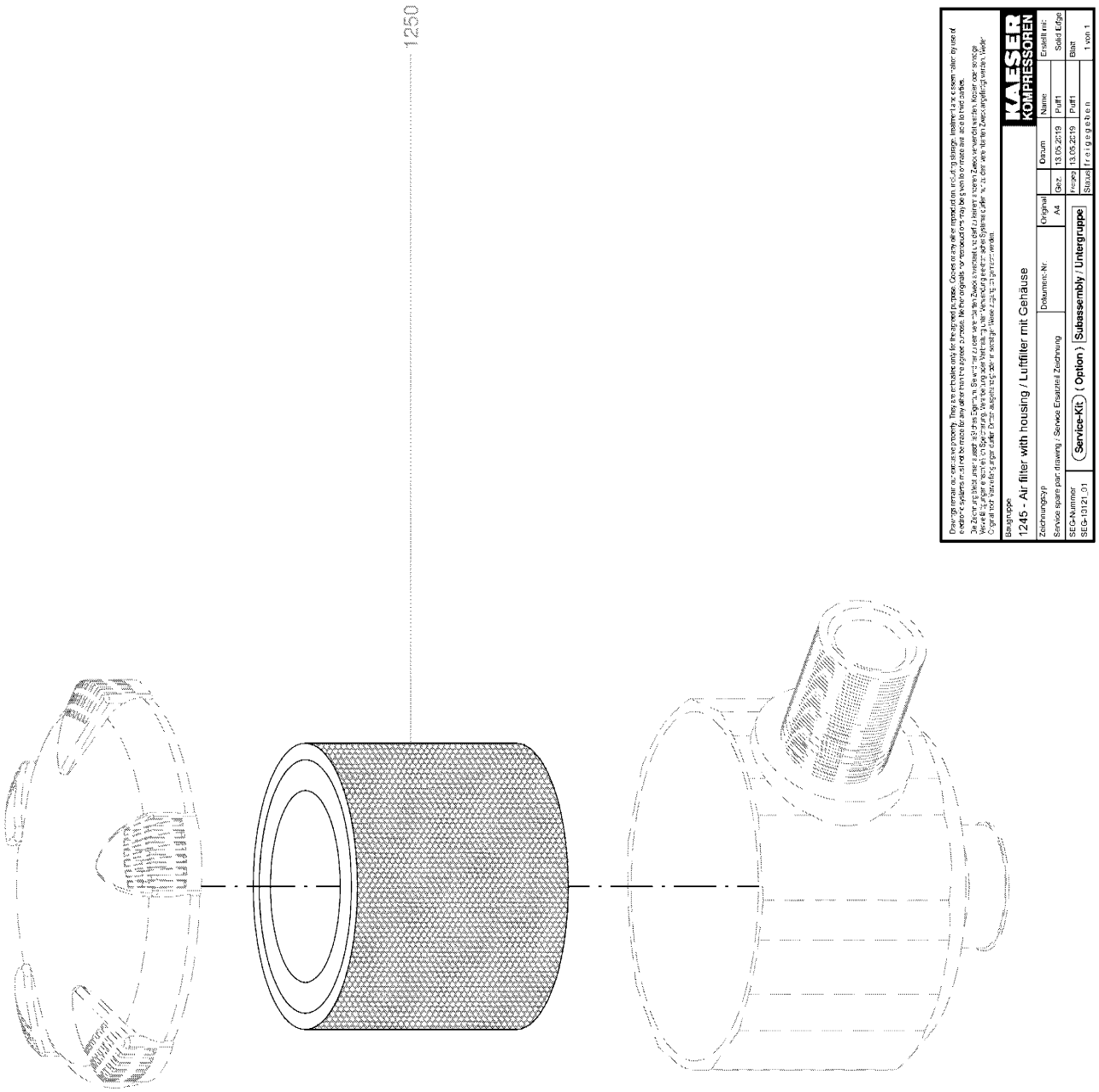
1250
Baugruppe
1245 - Air filter with housing / Luftfilter mit Gehäuse
Zeichnungstyp
Service spare part drawing / Service Ersatzteil Zeichnung
Dokument-Nr.
Original
A4
Datum
Name
Erstellt mit:
Solid Edge
Gez.
13.05.2019
Prüft
Freigegeben
Blatt
1 von 1
SEG-Nummer
SEG-130121_01
Service-Kit
( Option )
Subassembly / Untergruppe
KAESER KOMPRESSOREN

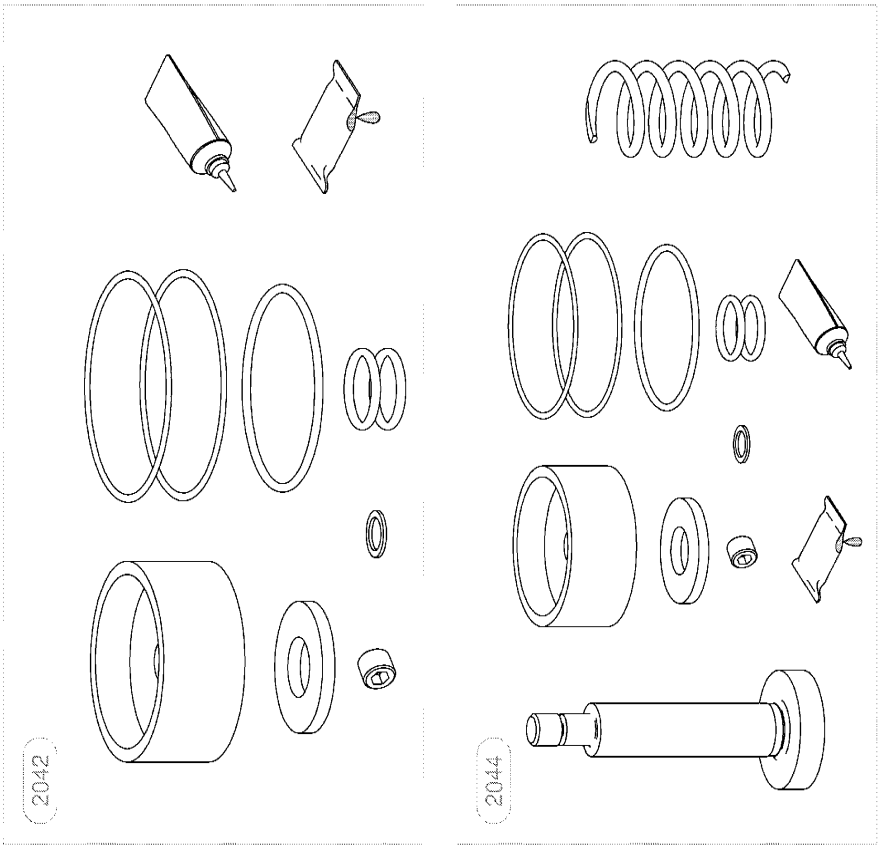


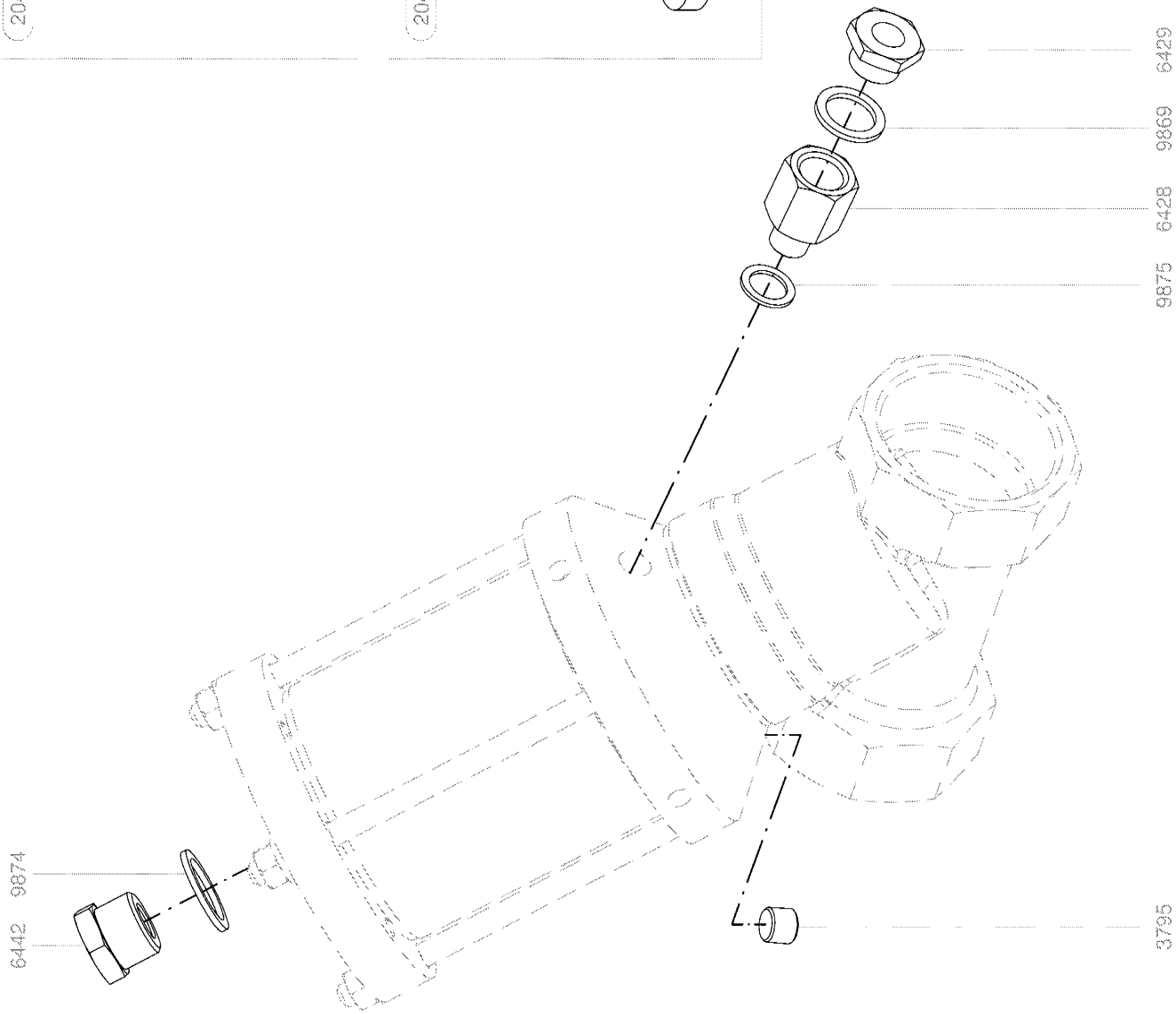


Baugruppe
2040 - Inlet valve / Einlassventil

| Zeichnungstyp | Dokument-Nr. | Original | Datum | Name | Erstellt mit: |
|---|---|---|---|---|---|
| Service spare part drawing / Service Ersatzteil Zeichnung | XXXXXXXX D 01 | A4 | Gez. 13.06.2017 | Heinig2 | Solid Edge |
| SEG-Nummer | Service-Kit ( Option ) | Subassembly / Untergruppe | Freigab 13.06.2017 | Heinig2 | Blatt |
| SEG-0356.01 | | | Status freigegeben | | 1 von 1 |

KAESER KOMPRESSOREN

Drawings remain our exclusive property. They are intended only for the agreed purpose. Copies in any other connection and including storage, treatment and processing by use of electronic systems shall not be made for any other than the agreed purpose. Not the originals nor reproductions may be given to private and are to be treated confidential.
Die Zeichnungen bleiben unser ausschließliches Eigentum. Sie werden nur zu dem vereinbarten Zweck verwendet und darf weder anderer Zweck verwendet werden. Kopien oder sonstige Vervielfältigungen einschließlich Speicherung, Verarbeitung oder Verbreitung unter Verwendung elektronischer Systeme dürfen nur zu dem vereinbarten Zweck angefertigt werden. Wenn Originale oder Kopien an Dritte ausgehändigt werden, ist sicherzustellen, dass diese vertraulich behandelt werden.

### 11.4.2 Spare parts option K9 (water cooling: tube heat exchanger)

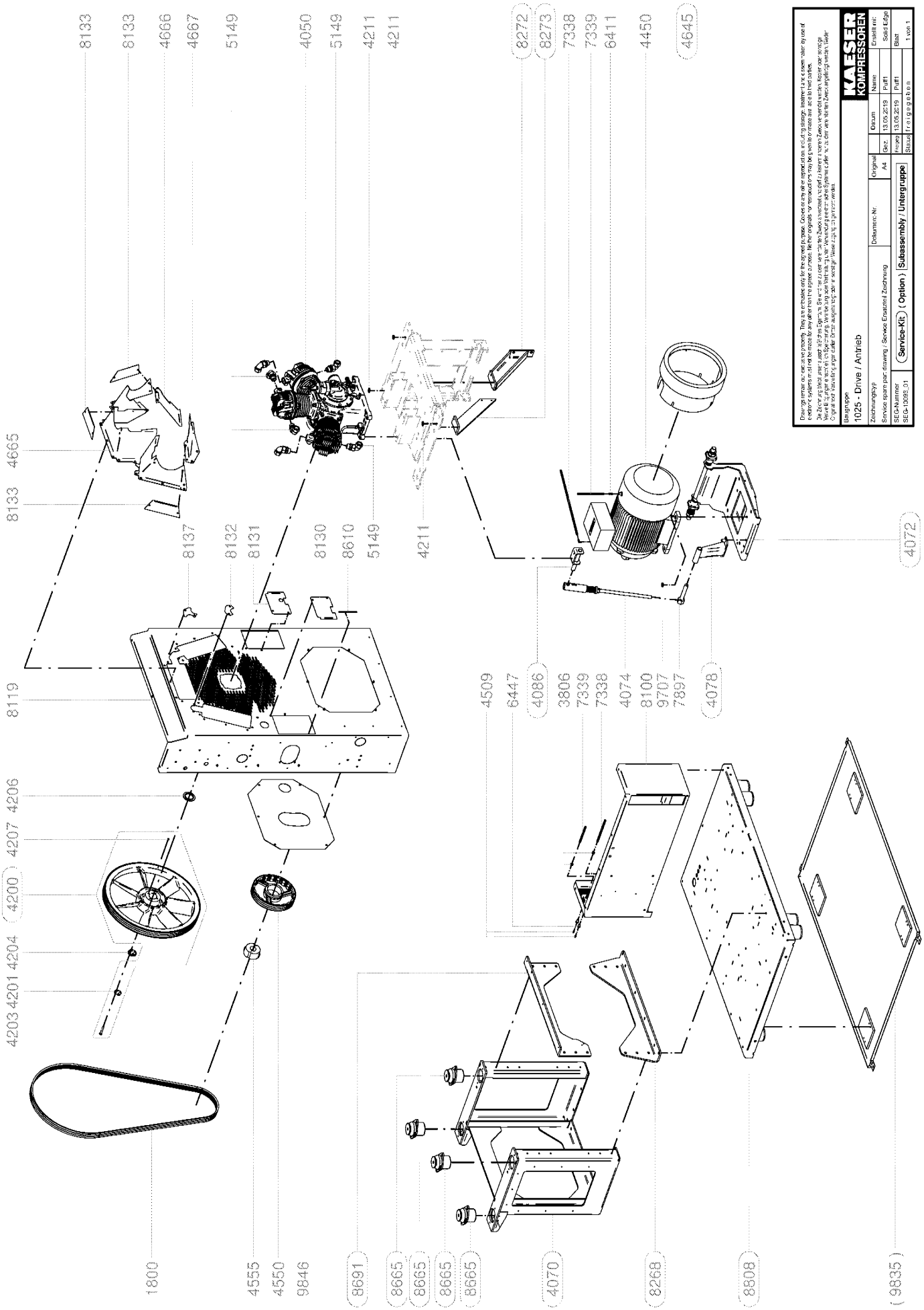
8133
8133
4666
4667
5149
4050
5149
4211
4211
8272
8273
7338
7339
6411
4450
4645
4665
8133
8137
8132
8131
8130
8610
5149
4211
4072
8119
4509
6447
4086
3806
7339
7338
4074
8100
9707
7897
4078
4206
4207
4200
4204
4201
4203
1800
4555
4550
9846
8691
8665
8665
8665
8665
4070
8268
8808
9835
KAESER KOMPRESSOREN
Baugruppe
1025 - Drive / Antrieb
Zeichnungstyp
Service spare part drawing / Service Ersatzteil Zeichnung
SEG-Nummer
SEG-10098_01
Service-Kit
( Option )
Subassembly / Untergruppe
Dokument-Nr:
Original
A4
Datum
Name:
Erstellt mit:
Gez.
13.05.2019
Puff1
Solid Edge
Freigegeben
13.05.2019
Puff1
Blatt
1 von 1
Status
Freigegeben

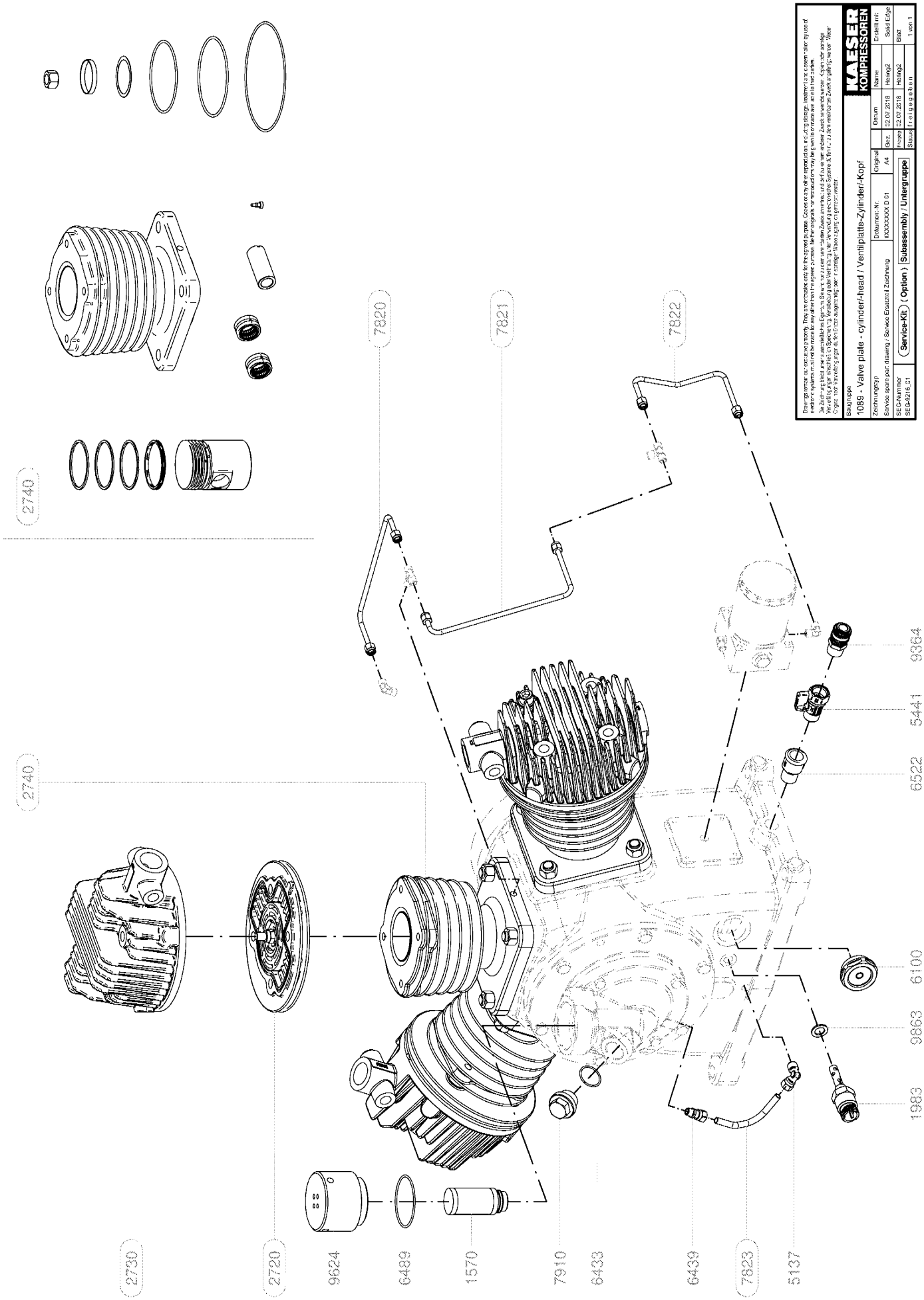
2740
7820
7821
7822
2740
9364
5441
6522
6100
9863
1983
2730
2720
9624
6489
1570
7910
6433
6439
7823
5137
KAESER KOMPRESSOREN
Datum
Name
Erstellt mit:
122.07.2018
Heising2
Solid Edge
Zeichnungstyp
Dokument-Nr.
Original
Service spare parts drawing / Service Ersatzteil Zeichnung
KXXXXXXX.D.01
A4
Satz
Blatt
1 von 1
SEG-Nummer
SEG-9216_01
Service-Kit ( Option )
Subassembly / Untergruppe
1089 - Valve plate - cylinder-head / Ventilplatte-Zylinder-Kopf

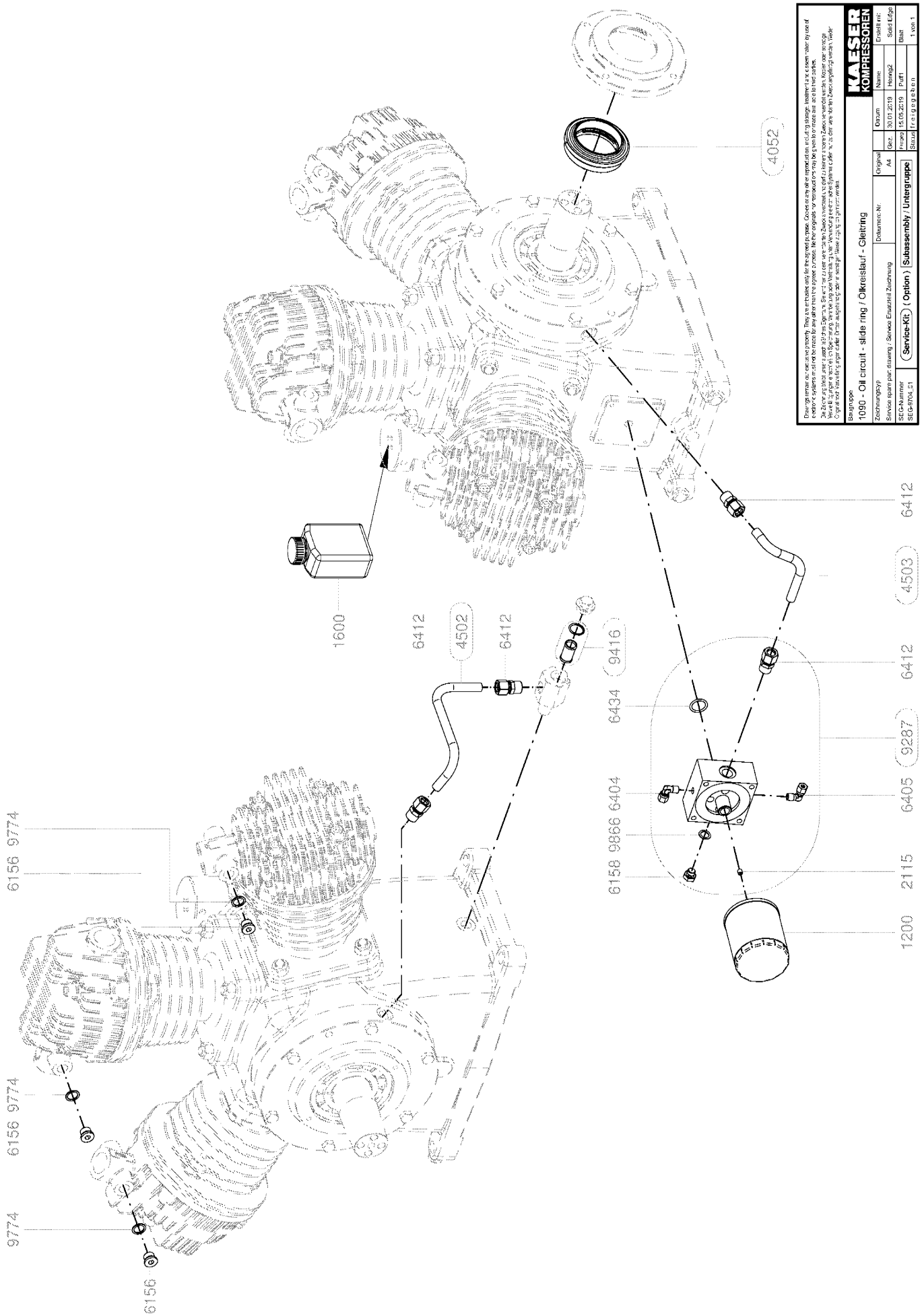
1600
6412
4502
6412
9416
6434
6158 9866 6404
6156 9774
6156 9774
9774
6156
4052
6412
4503
6412
9287
6405
2115
1200
Baugruppe
1090 - Oil circuit - slide ring / Ölkreislauf - Gleitring
Zeichnungstyp
Service spare part drawing / Service Ersatzteil Zeichnung
Dokument-Nr:
Original
A4
Datum
Name:
Erstellt mit:
Gez.
30.01.2019
Hsong2
Solid Edge
Kontr.
15.05.2019
Pufff1
Blatt
1 von 1
SEG-Nummer
SEG-9704_01
Service-Kit
( Option )
Subassembly / Untergruppe
KAESER KOMPRESSOREN

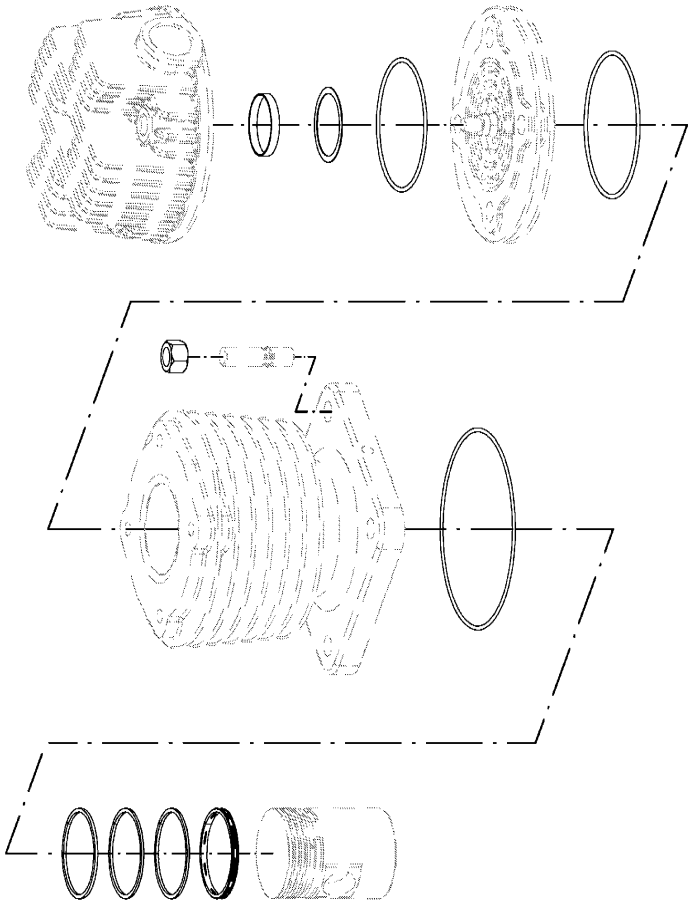

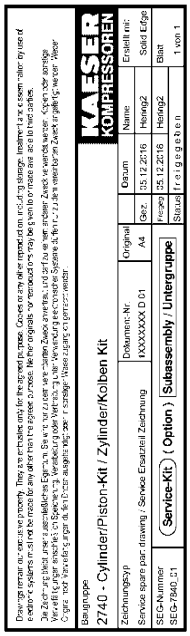
Baugruppe
2740 - Cylinder/Piston-Kit / Zylinder/Kolben Kit
Zeichnungstyp
Dokument-Nr.
Original
Datum
Name
Erstellt mit:
Service spare parts drawing / Service Ersatzteil Zeichnung
XXXXXXXX D.01
A4
Gez.
15.12.2016
Heising2
Solid Edge
SEG-Nummer
SEG-7940_01
Freigegeben
15.12.2016
Heising2
Blatt
Status
Service-Kit
( Option )
Subassembly / Untergruppe
1 von 1
KAESER KOMPRESSOREN

2744

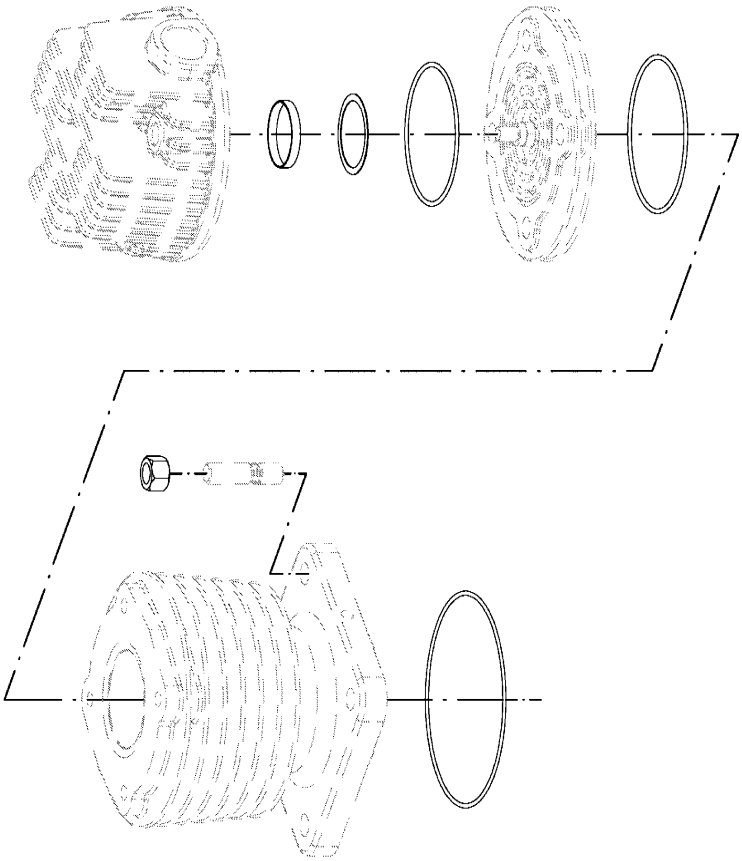

2710

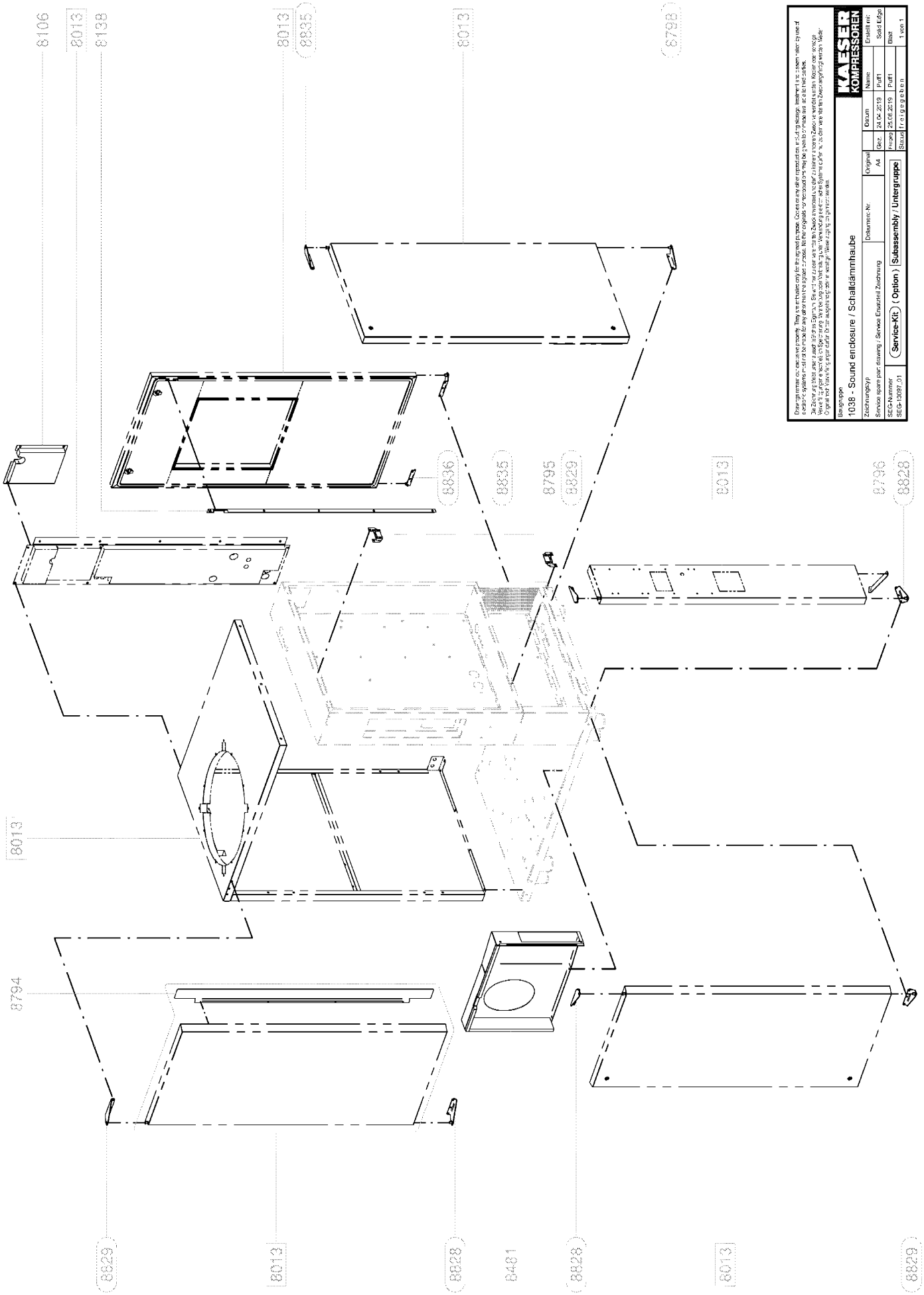
8106
8013
8138
8013
8835
8013
8798
8836
8835
8795
8829
8013
8798
8828
8013
8794
8829
8013
8828
8481
8828
8013
8829
KAESER KOMPRESSOREN
Baugruppe
1038 - Sound enclosure / Schalldämmhaube
Zeichnungstyp
Service spare part drawing / Service Ersatzteil Zeichnung
Dokument-Nr:
Original
A4
Gez.
24.04.2019
Pufff
Krgep
25.06.2019
Pufff
Datum
Name:
Erstellt mit:
Solid Edge
Blatt
1 von 1
SEG-Nummer
SEG-10097_01
Service-Kit
( Option )
Subassembly / Untergruppe

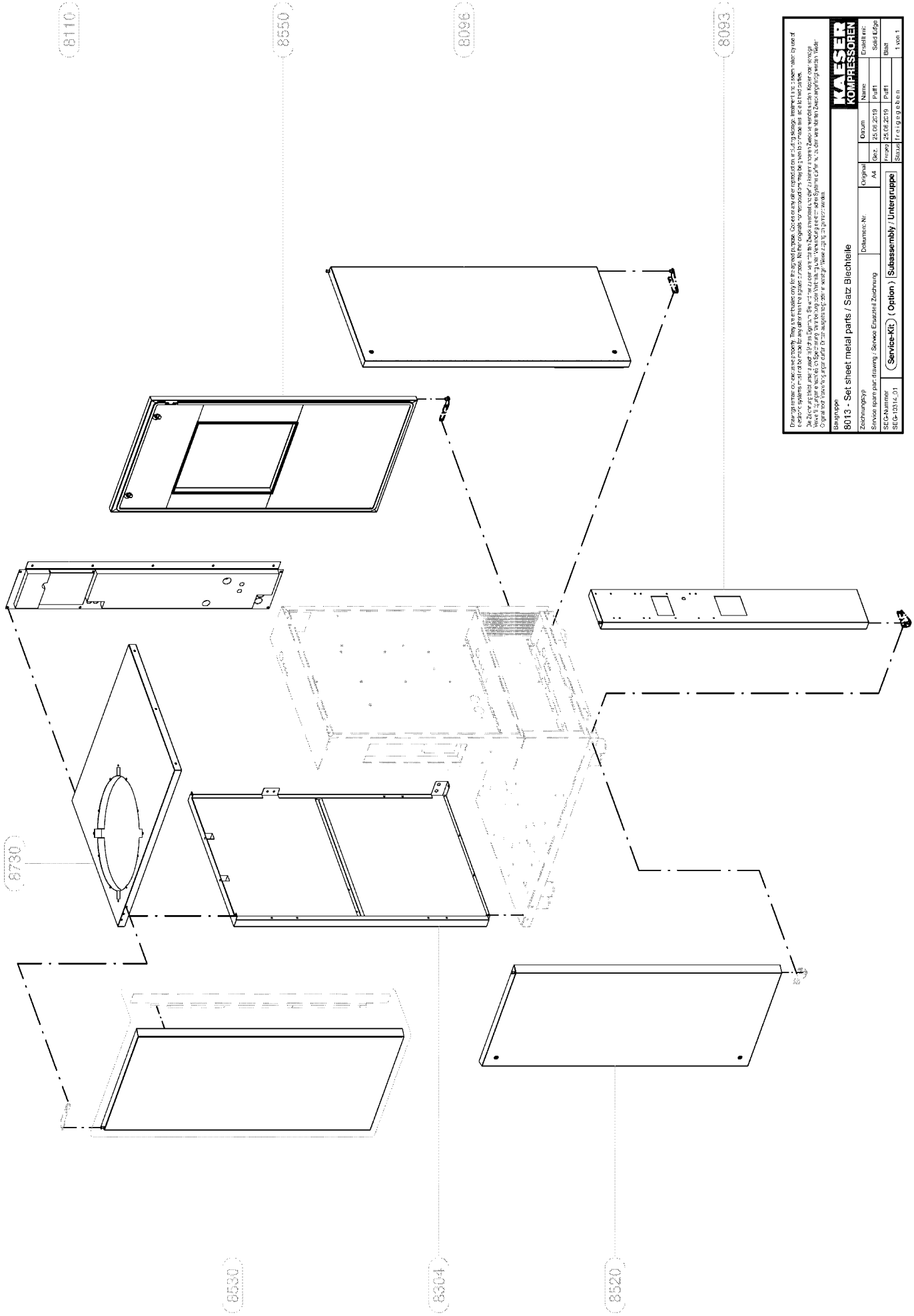
8110
8550
8096
8093
8730
8530
8304
8520
KAESER KOMPRESSOREN
Baugruppe
8013 - Set sheet metal parts / Satz Blechteile
Zeichnungstyp
Service spare part drawing / Service Ersatzteil Zeichnung
Dokument-Nr.
Original A4
Datum
25.06.2019
Name
Erstellt mit:
Solid Edge
Gez.
Prüft
Freigab
Blatt
1 von 1
SEG-Nummer
SEG-1331c_01
Service-Kit ( Option ) Subassembly / Untergruppe
Status freigegeben

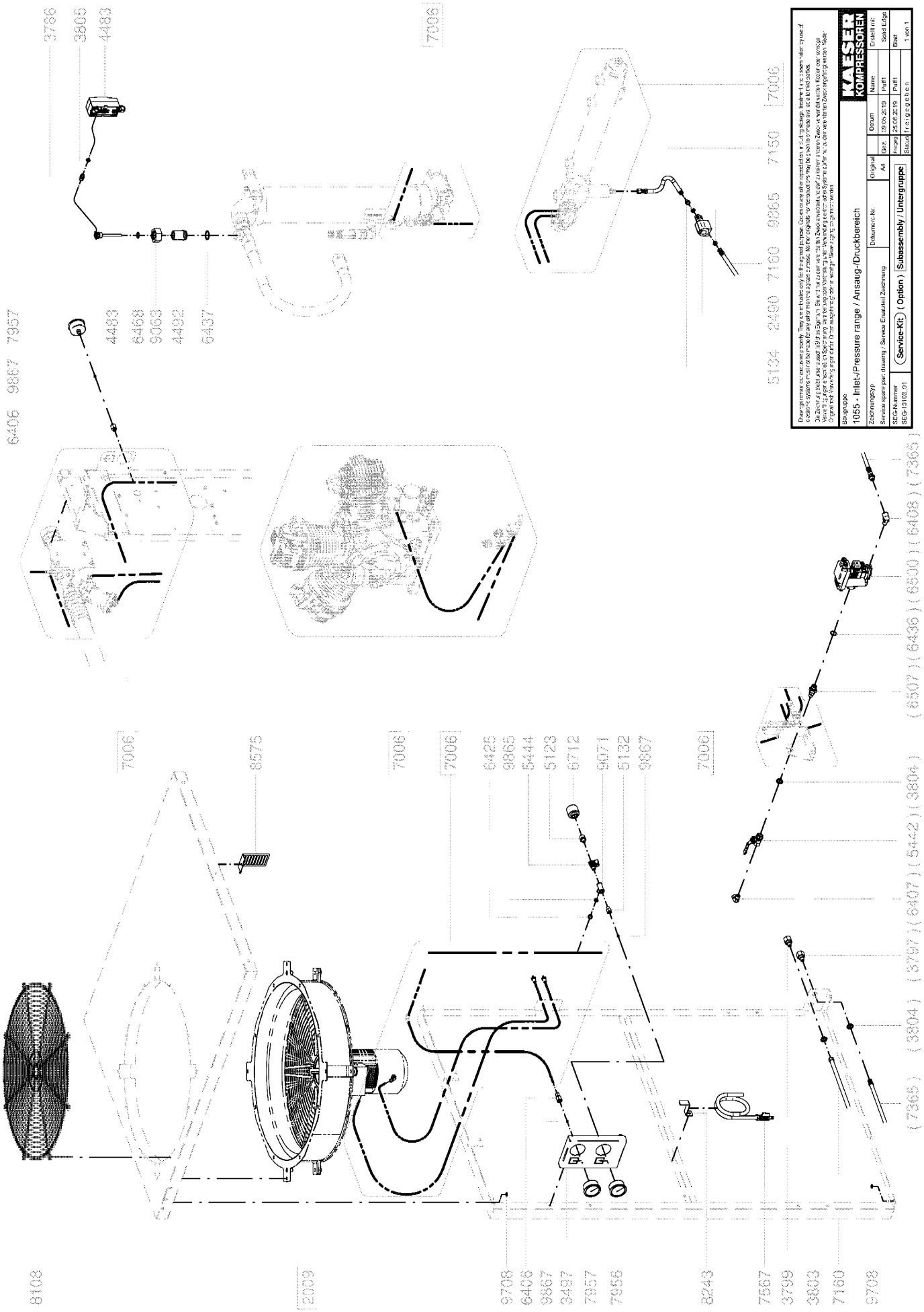
3786
3805
4483
7006
6406
9867
7957
4483
6468
9063
4492
6437
5134
2490
7160
9865
7150
7006
7006
8575
7006
7006
6425
9865
5444
5123
6712
9071
5132
9867
7006
( 7365 )
( 3804 )
( 3797 )
( 6407 )
( 5442 )
( 3804 )
( 6507 )
( 6436 )
( 6500 )
( 6408 )
( 7365 )
8108
2003
9708
6406
9867
3497
7957
7956
8243
7567
3799
3003
7160
9708
Drawing remains our exclusive property. They are intended only for the agreed purpose. Copies or any other reproduction including storage, transmission to other parties or use of extracts/systems must not be made or made available without our express consent. Not the originals nor reproductions may be given to competitors and are to be treated confidential.
Die Zeichnungen bleiben unser alleiniges Eigentum. Sie sind nur zu dem vereinbarten Zweck verwendbar und dürfen weder kopiert noch sonstige Vervielfältigungen jeglicher Art noch Auszüge daraus Dritten zugänglich gemacht werden. Wider Verwendungsverstoß oder Spionage werden wir rechtlich tätig. Nur für den vereinbarten Zweck angefertigte Kopien sind nach Erledigung unverzüglich zu vernichten.
Baugruppe
1055 - Inlet-/Pressure range / Ansaug-/Druckbereich
Zeichnungstyp
Service spare part drawing / Service Ersatzteil Zeichnung
Dokument-Nr.
Original
A4
Datum
Name
Gez.
19.05.2019
Pu/Fl
Erstellt mit:
Solid Edge
Freigab.
25.06.2019
Pu/Fl
Blatt
1 von 1
SEG-Nummer
SEG-13109_01
Service-Kit
( Option )
Subassembly / Untergruppe
Status: Freigegeben
KAESER KOMPRESSOREN

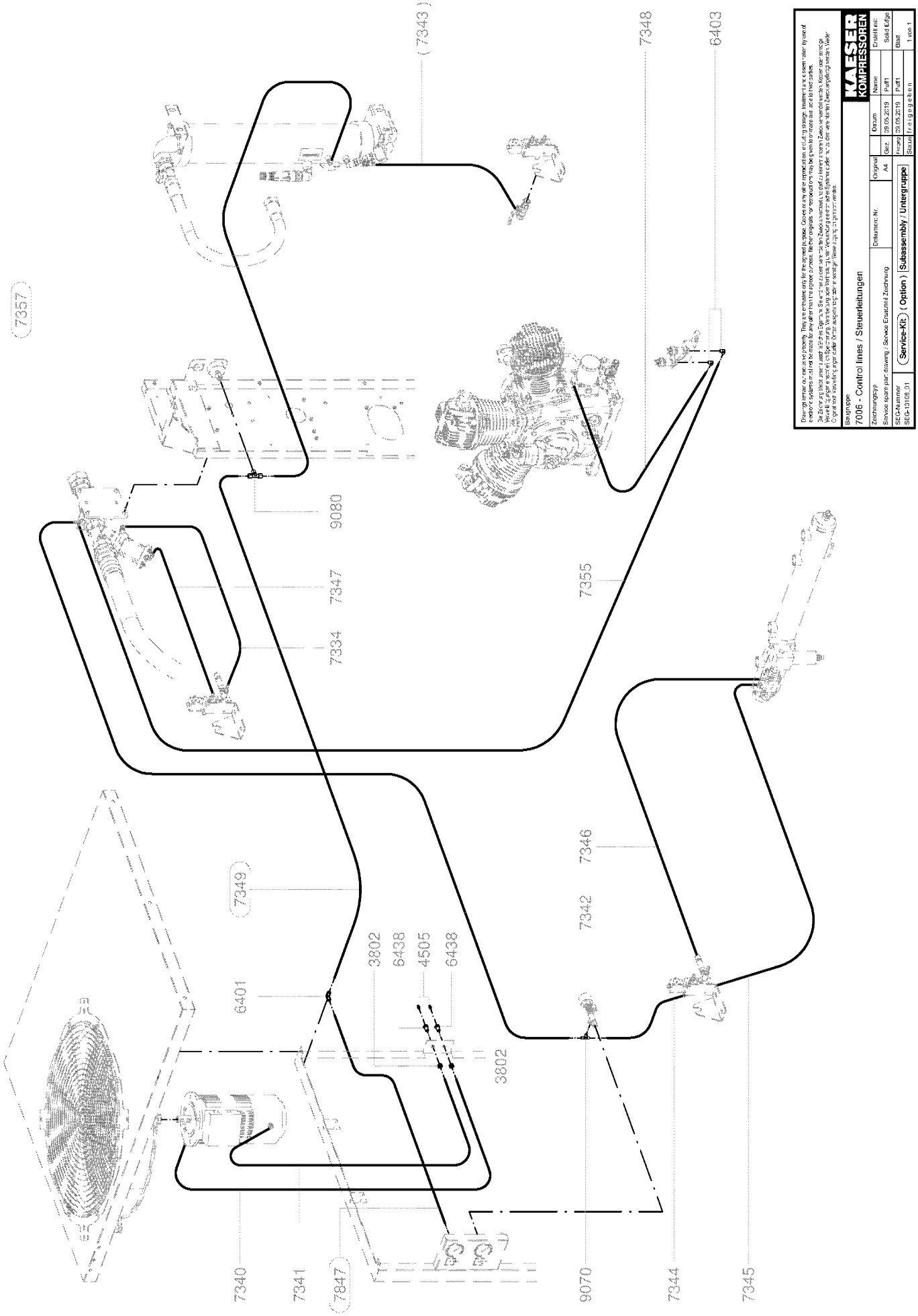
7357
(7343)
7348
6403
9080
7347
7334
7355
7349
7346
7342
3802
6438
4505
6438
6401
3802
7340
7341
7847
9070
7344
7345
Baugruppe
7006 - Control lines / Steuerleitungen
Zeichnungstyp
Service spare parts drawing / Service Ersatzteil Zeichnung
SEG-Nummer
SEG-13108_01
Service-Kit
(Option)
Subassembly / Untergruppe
Dokument-Nr.
Original A4
Datum
Name
Erstellt mit:
Solid Edge
Status
freigegeben
1 von 1
KAESER KOMPRESSOREN

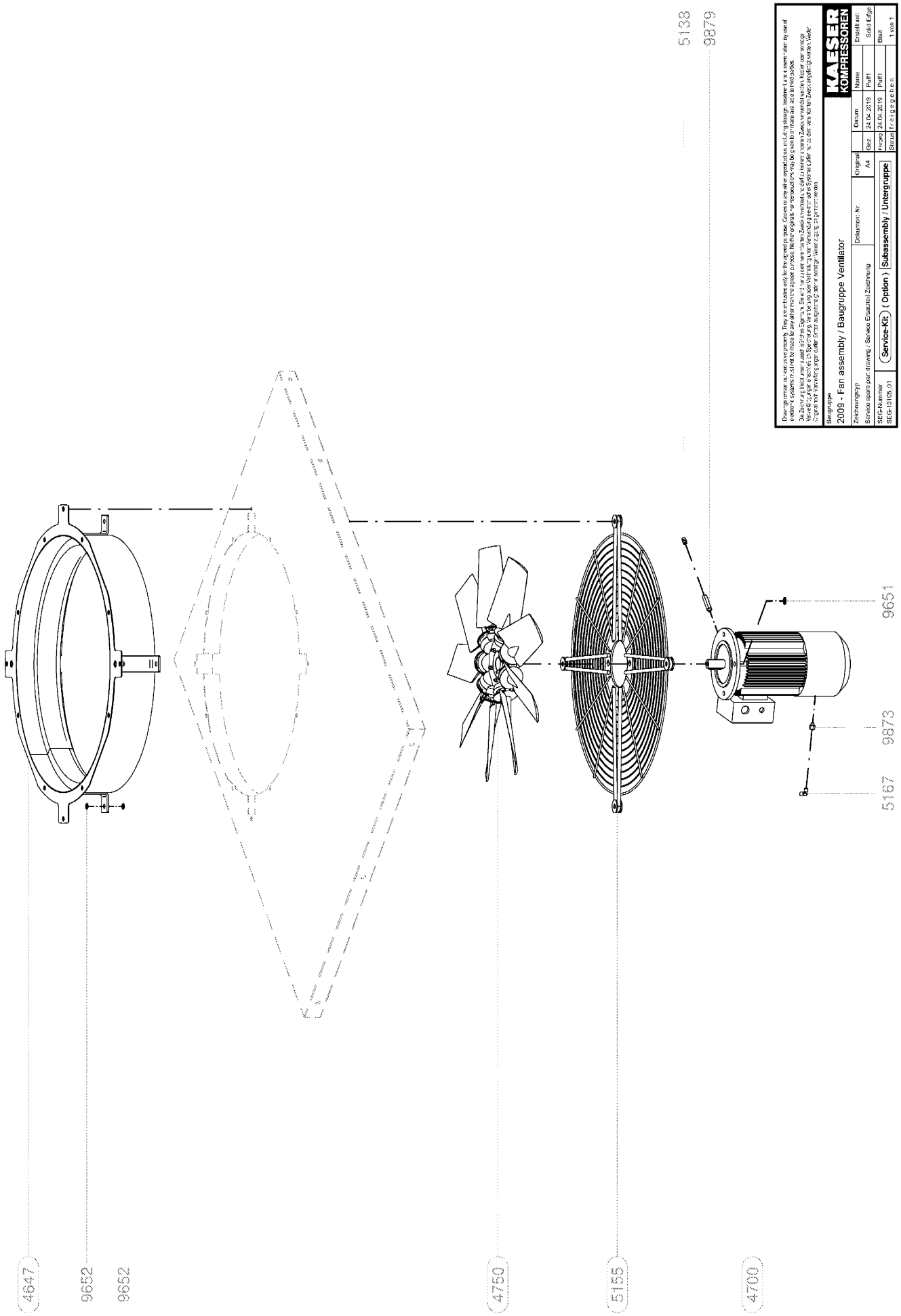
4647
9652
9652
4750
5155
4700
5167
9873
9651
5138
9879
Baugruppe
2009 - Fan assembly / Baugruppe Ventilator
Zeichnungstyp
Service spare part drawing / Service Ersatzteil Zeichnung
Dokument-Nr:
Original
A4
Gez.
Datum
24.06.2019
Name:
Puff1
Erstellt mit:
Solid Edge
Kriegs
24.06.2019
Puff1
Blatt
1 von 1
SEG-Nummer
SEG-13105.01
Service-Kit
( Option )
Subassembly / Untergruppe
Status
freigegeben
KAESER KOMPRESSOREN

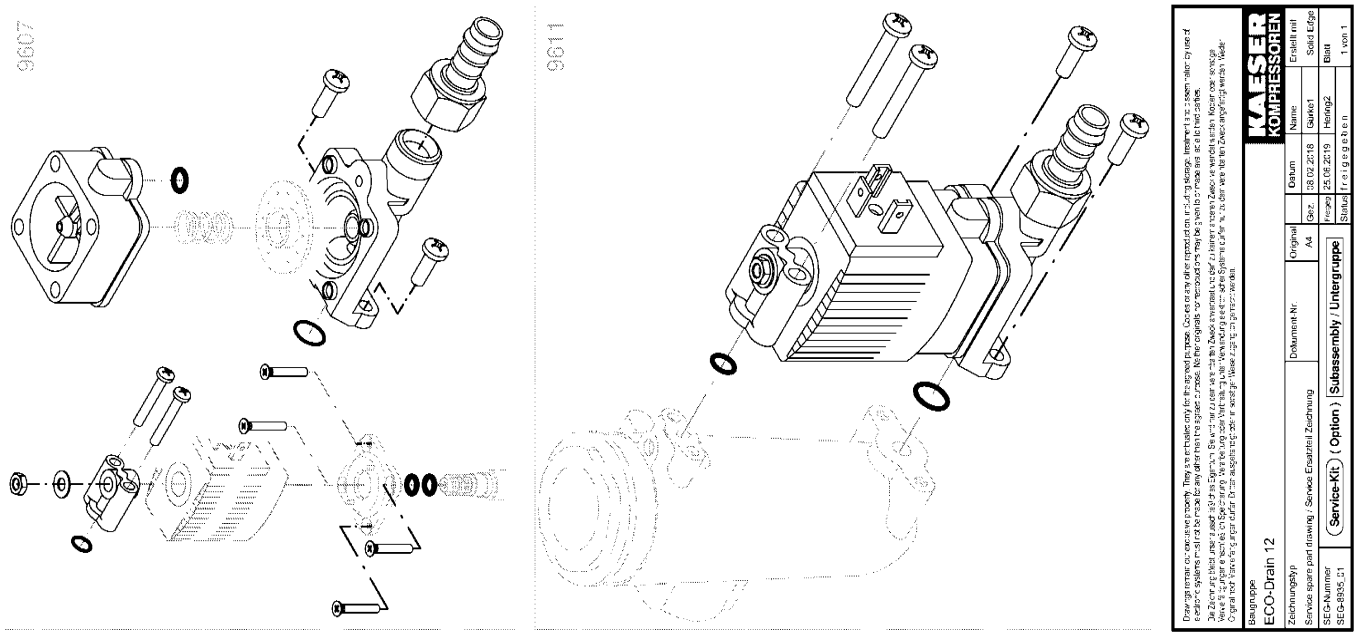
9607
9611
9625
9631
9615
9629
9601
9603
9621
KAESER KOMPRESSOREN
Baugruppe
ECO-Drain 12
Zeichnungstyp
Service spare part drawing / Service Ersatzteil Zeichnung
Dokument Nr.
Original A4
Datum
Name
Erstellt mit
Gezeichnet 28.02.2018 Gaukel1 Solid Edge
SEG-Nummer
SEG-9955_01
Service-Kit ( Option ) Subassembly / Untergruppe
Freigabe 25.06.2019 Heising2 Blatt
Status freigegeben 1 von 1

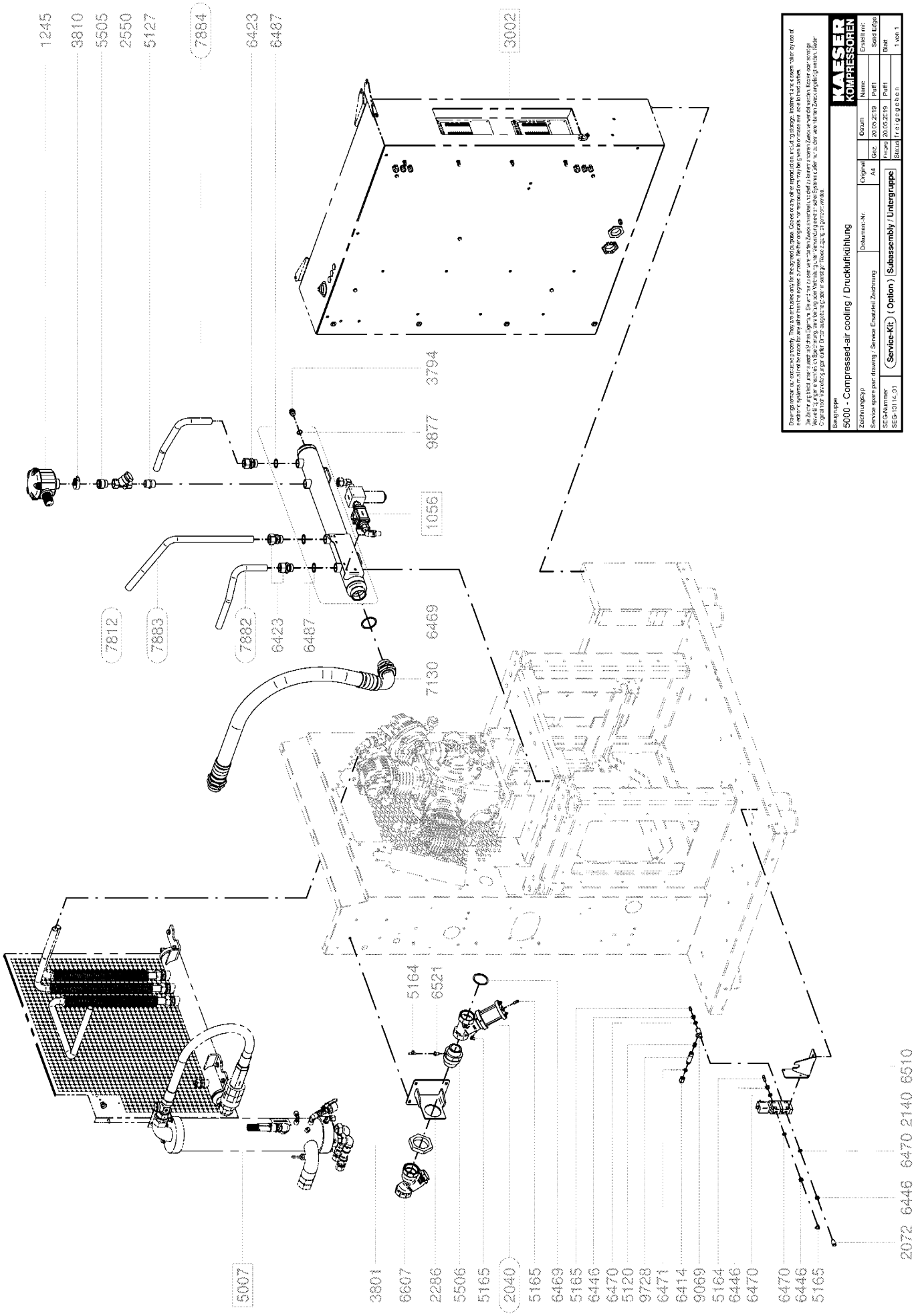
1245
3810
5505
2550
5127
7884
6423
6487
3002
3794
9877
1056
7812
7883
7882
6423
6487
6469
7130
5164
6521
5007
3801
6607
2286
5506
5165
2040
5165
6469
5165
6446
6470
5120
9728
6471
6414
9069
5164
6446
6470
6470
6446
5165
2072
6446
6470
2140
6510
KAESER KOMPRESSOREN
Baugruppe
5000 - Compressed-air cooling / Druckluftkühlung
Zeichnungstyp
Service spare part drawing / Service Ersatzteil Zeichnung
Dokument-Nr:
Original
A4
Datum
Gez. 20.05.2019
Freigegeben 20.05.2019
Name:
Puff1
Puff1
Erstellt mit:
Solid Edge
SEG-Nummer
SEG-10114_01
Service-Kit
( Option )
Subassembly / Untergruppe
Blatt
1 von 1
Status freigegeben

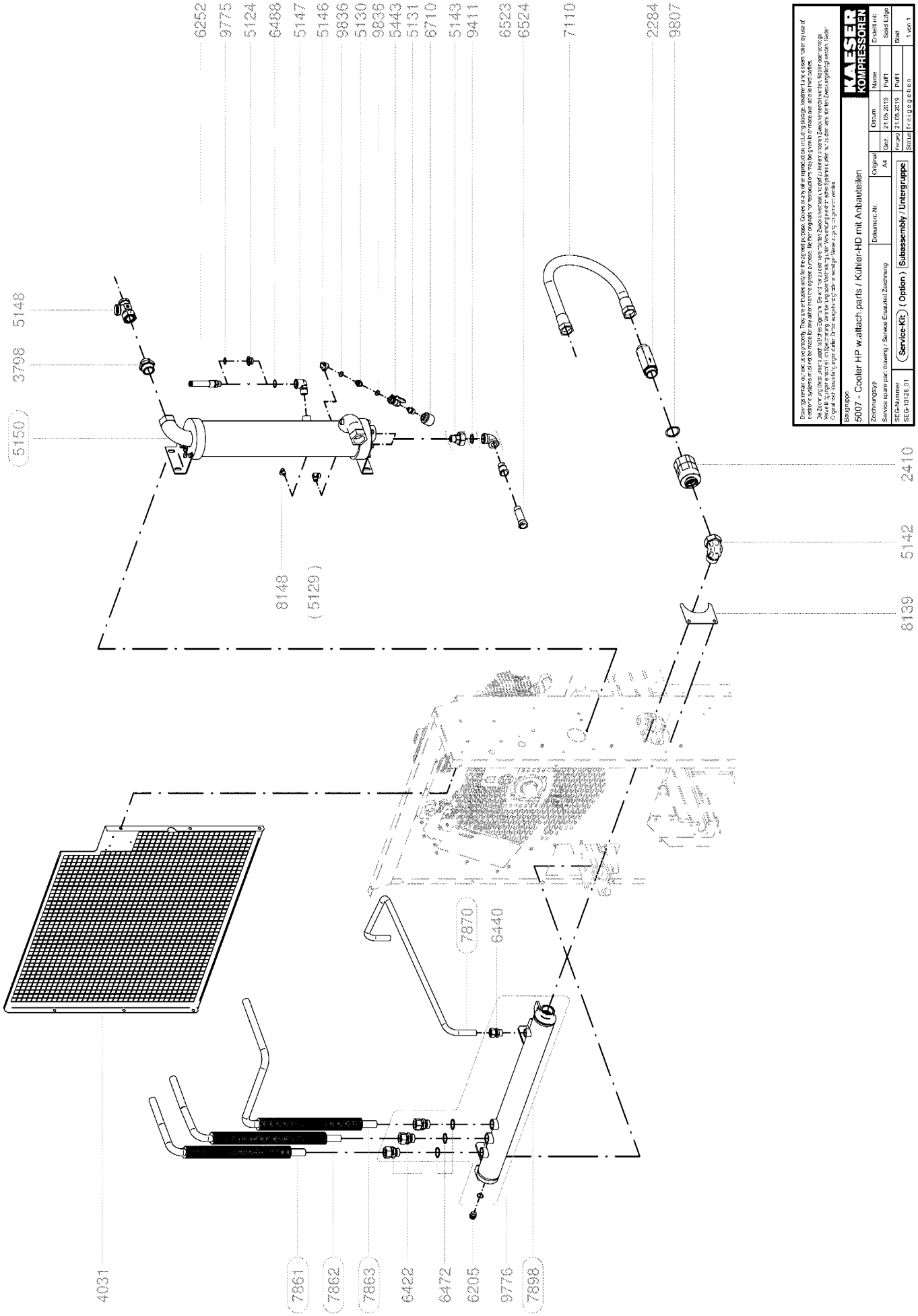
6252
9775
5124
6488
5147
5146
9836
5130
9836
5443
5131
6710
5143
9411
6523
6524
7110
2284
9807
5148
3798
(5150)
8148
(5129)
2410
5142
8139
7870
6440
4031
7861
7862
7863
6422
6472
6205
9776
7898
KAESER KOMPRESSOREN
Baugruppe
5007 - Cooler HP w.attach.parts / Kühler-HID mit Anbauteilen
Zeichnungstyp
Service spare part drawing / Service Ersatzteil Zeichnung
Dokument-Nr.
Original
A4
Datum
Name
Erstellt mit:
21.05.2019
Pfaff1
Solid Edge
Freigegeben
Status
Blatt
1 von 1
SEG-Nummer
SEG-10126_01
Service-Kit
( Option )
Subassembly / Untergruppe

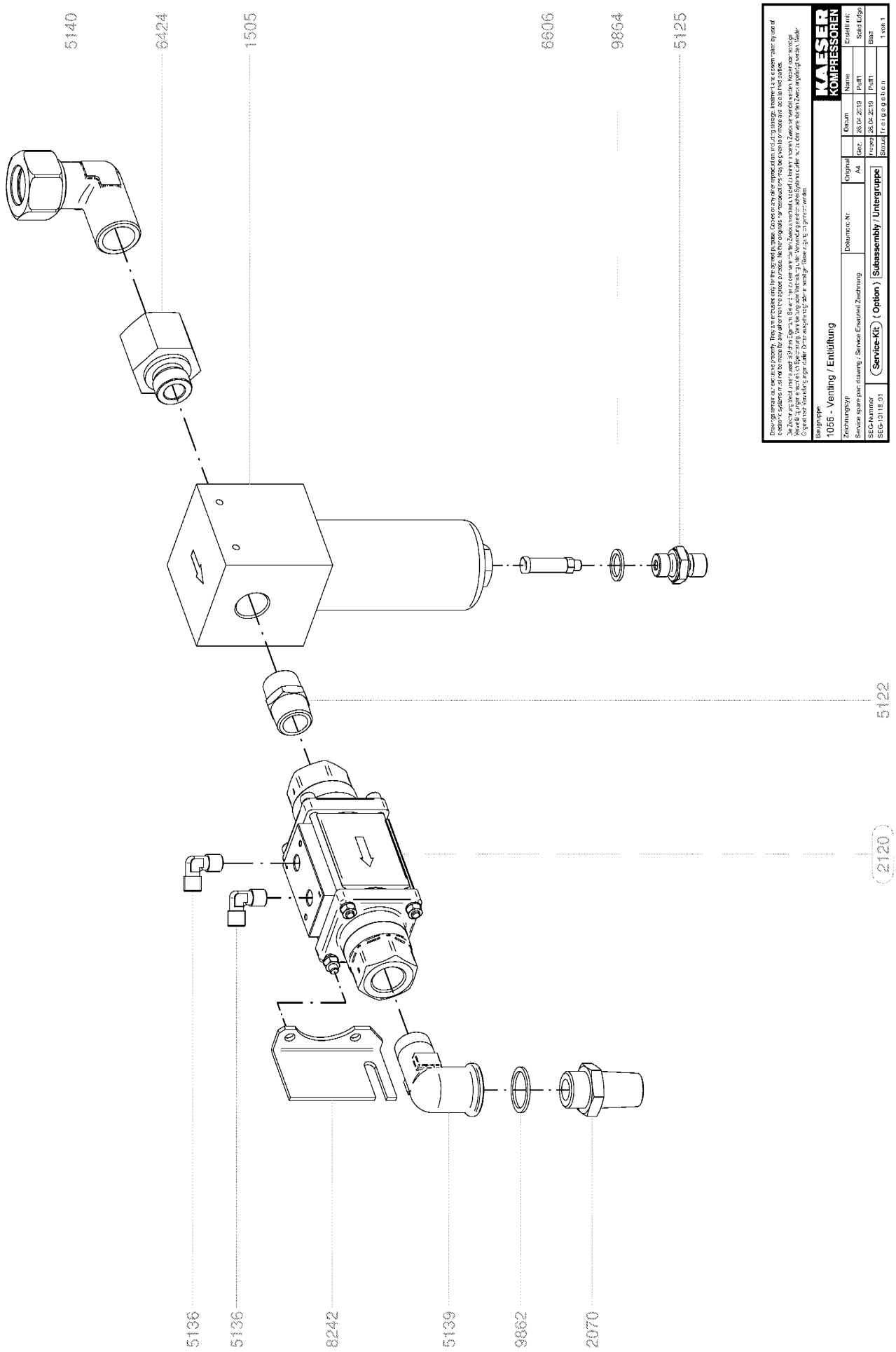
5140
6424
1505
6606
9864
5125
5122
2120
5136
5136
8242
5139
9862
2070
Baugruppe
1056 - Venting / Entlüftung
Zeichnungstyp
Service spare part drawing / Service Ersatzteil Zeichnung
SEG-Nummer
SEG-10118_01
Service-Kit
( Option )
Subassembly / Untergruppe
Dokument-Nr:
Original
Datum
Name:
Erstellt mit:
Gez.
26.02.2019
Puff1
Solid Edge
Freigegeben
26.02.2019
Puff1
Blatt
Status
freigegeben
1 von 1
KAESER KOMPRESSOREN

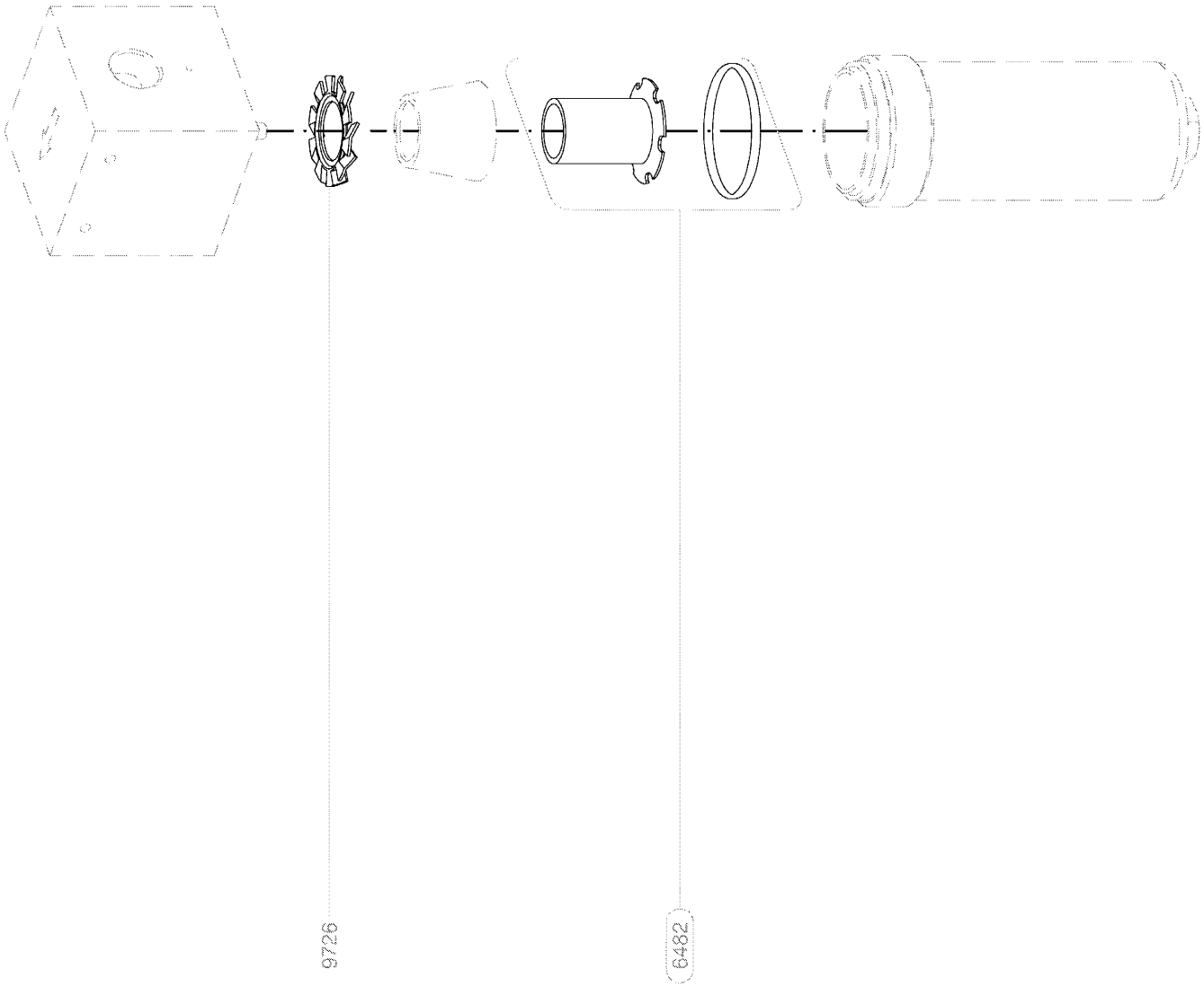


Baugruppe
1505 - Control air filter / Steuerluftfilter

| Zeichnungstyp | Dokument-Nr. | Original | Datum | Name | Erstellt mit: |
|---|---|---|---|---|---|
| Service spare parts drawing / Service Ersatzteil Zeichnung | | A4 | Gez. 26.04.2019 | Pfuff | Solid Edge |
| SEG-Nummer | Service-Kit ( Option ) | Subassembly / Untergruppe | Freigab 26.04.2019 | Pfuff | Blatt |
| SEG-0012C.01 | | | Status freigegeben | | 1 von 1 |

KAESER KOMPRESSOREN

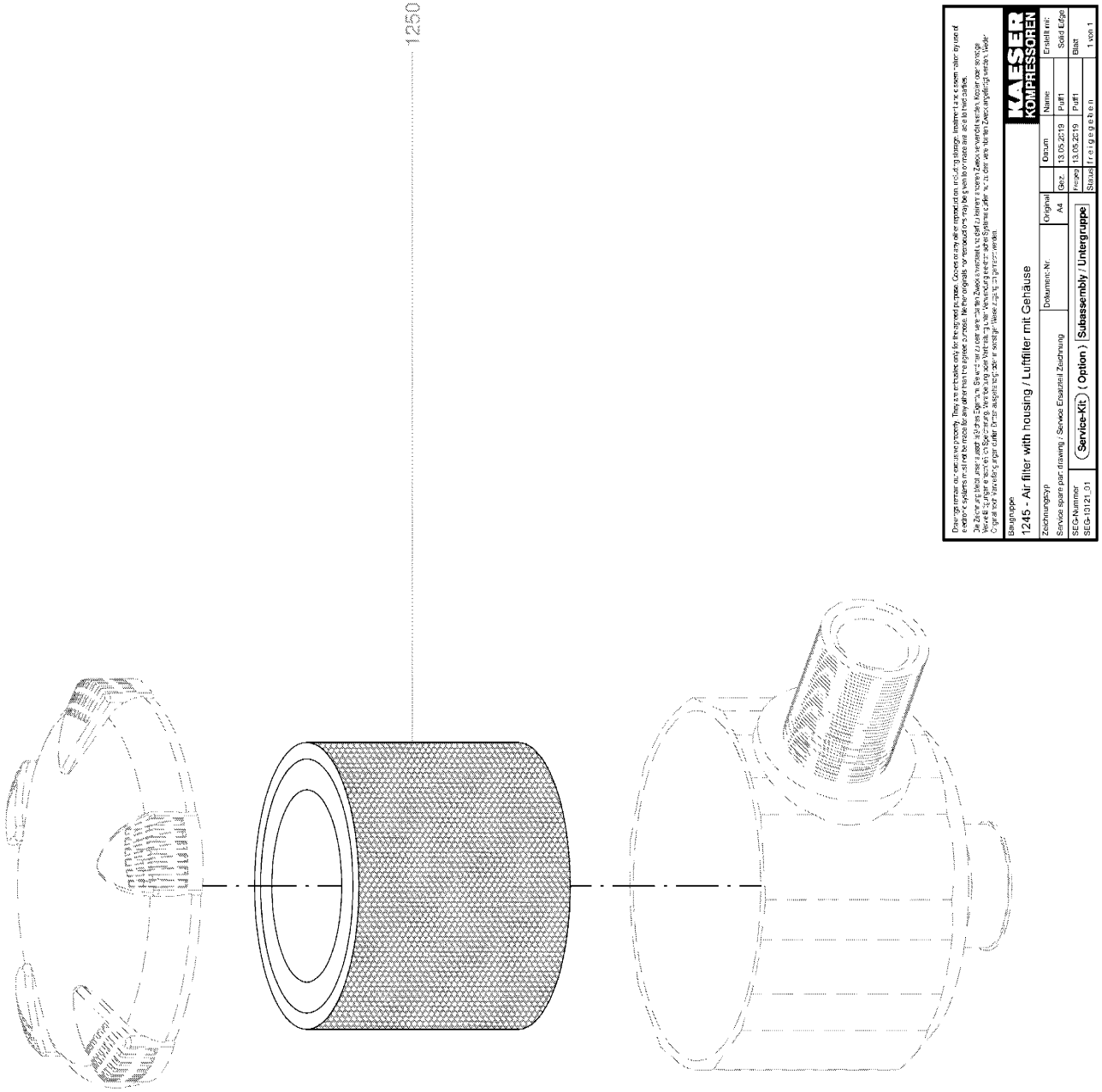
1250
Baugruppe
1245 - Air filter with housing / Luftfilter mit Gehäuse
Zeichnungstyp
Service spare part drawing / Service Ersatzteil Zeichnung
Dokument-Nr:
Original
A4
Datum
Name:
Gez.
13.05.2019
Pufff
Ersetzt nr:
Solid Edge
Freigegeben
13.05.2019
Pufff
Blatt
1 von 1
SEG-Nummer
SEG-10121.01
Service-Kit
( Option )
Subassembly / Untergruppe
KAESER KOMPRESSOREN

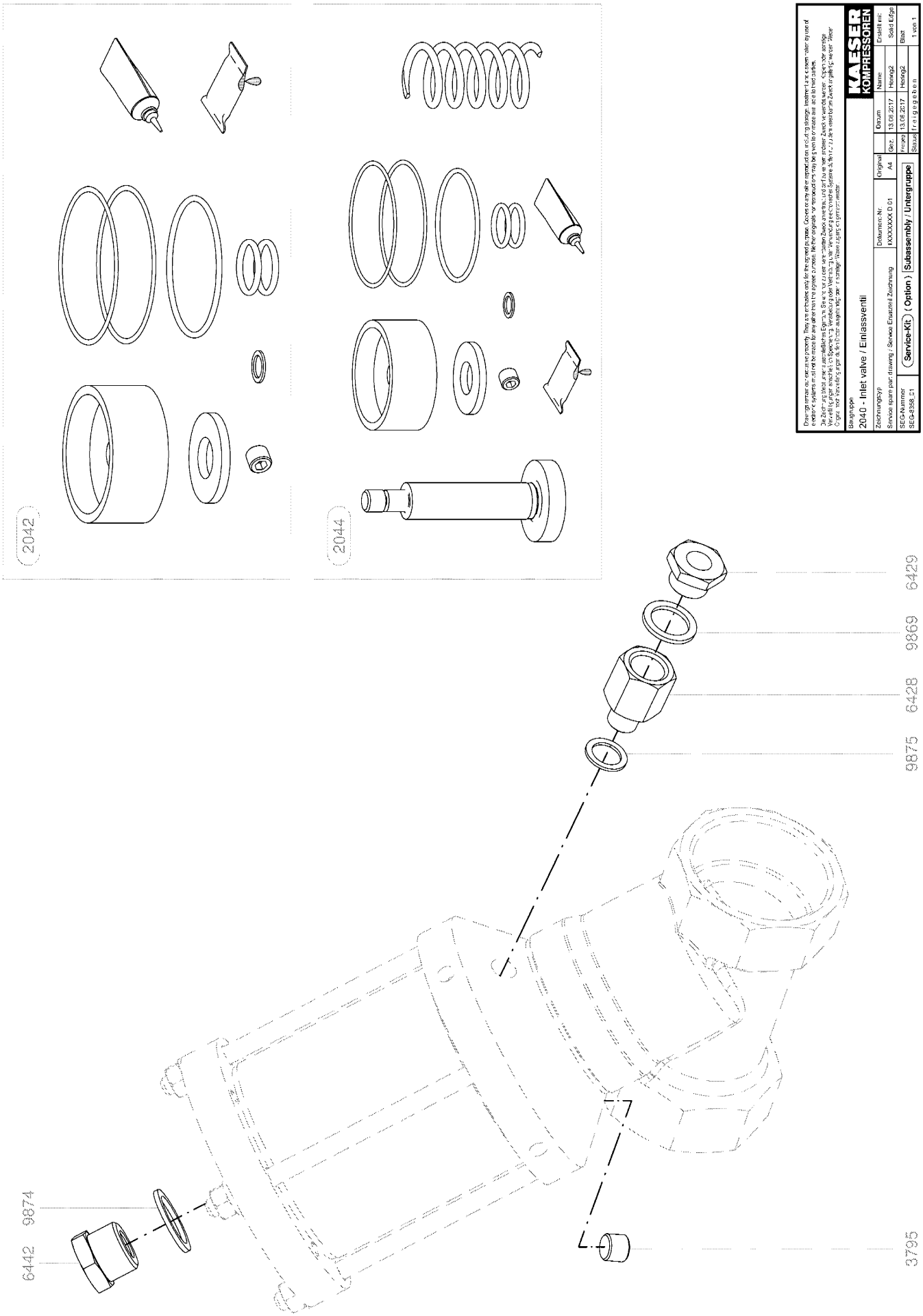
2042
2044
6429
9869
6428
9875
9874
6442
3795
Baugruppe
2040 - Inlet valve / Einlassventil
Zeichnungstyp
Service spare parts drawing / Service Ersatzteil Zeichnung
SEG-Nummer
SEG-0358_01
Service-Kit
( Option )
Subassembly / Untergruppe
Dokument-Nr.
XXXXXXXX D 01
Original
A4
Datum
13.06.2017
Freigegeben
Name
Hesing2
Erstellt mit:
Solid Edge
Blatt
1 von 1
KAESER KOMPRESSOREN

# 12 Decommissioning, Storage and Transport

## 12.1 Decommissioning

Decommissioning is necessary, for example, under the following circumstances:

- the machine is temporarily not needed,
- the machine is to be moved to another location,
- The machine is to be scrapped.

### Temporary decommissioning

Precondition The machine can be started at regular intervals.

➤ Run the machine once a week under load for at least 30 minutes to ensure sufficient corrosion protection.

### Long-term decommissioning

➤ In this case, please contact an authorized KAESER service representative.

## 12.2 Packing

A wooden crate is required for overland transport to protect the machine from mechanical damage.

Other measures must be taken for the transport of machines by sea or air. Please contact an authorized KAESER service representative for more information.

Material Desiccant
Plastic sheeting
Wooden crate

Precondition The machine is decommissioned.
Machine is dry and cooled down.

1. Wrap the machine fully in plastic sheeting.
2. Place sufficient desiccant (e.g. silica gel) inside the plastic sheeting.
3. Protect the machine in a wooden crate against mechanical damages.

## 12.3 Storage

Moisture can lead to corrosion, particularly on the surfaces of the compressor block.

Frozen moisture can damage components, valve diaphragms, and gaskets.

Please consult with KAESER if you have questions to the appropriate storage and commissioning.

1. **NOTICE** *Moisture and frost can damage the machine!*
   - ➤ *Prevent ingress of moisture and formation of condensation.*
   - ➤ *Maintain a storage temperature of >32°F.*
2. Store the machine in a dry, frost-proof room.

## 12.4 Transport

### 12.4.1 Safety

Weight and center of gravity determine the most suitable method of transportation.

Please consult with KAESER if you intend to transport the machine in freezing temperatures.

Precondition Transport only by forklift truck or suitable lifting gear and only by personnel trained in the safe transportation of loads.

➤ Ensure the danger area is clear of personnel.

### 12.4.2 Transport with a forklift truck

Precondition The whole machine is over the forks.

Fig. 61 Transporting with a forklift truck

1. Take note of the center of gravity.
2. Drive the forks completely under the machine or pallet and lift carefully.

### 12.4.3 Transport with a hoist

Only suitable and approved load-carrying and attachment devices ensure proper transport of the machine with a hoist (e.g., crane). Suitable crossbeams ensure sufficient distance of the attachment resources from the machine housing to prevent damage.

The machine is not equipped with fastening points.

Examples of unsuitable fastening points:

- Pipe sockets
- Attached components such as cyclone separators, condensate drains or compressed air filters.

➤ Consult with KAESER if you require suitable load-carrying and attachment devices or have questions regarding the correct use.

Precondition Load-carrying and attachment devices meet the local safety regulations.

The hoist, load-carrying and attachment devices or the lifted machine do not endanger personnel.

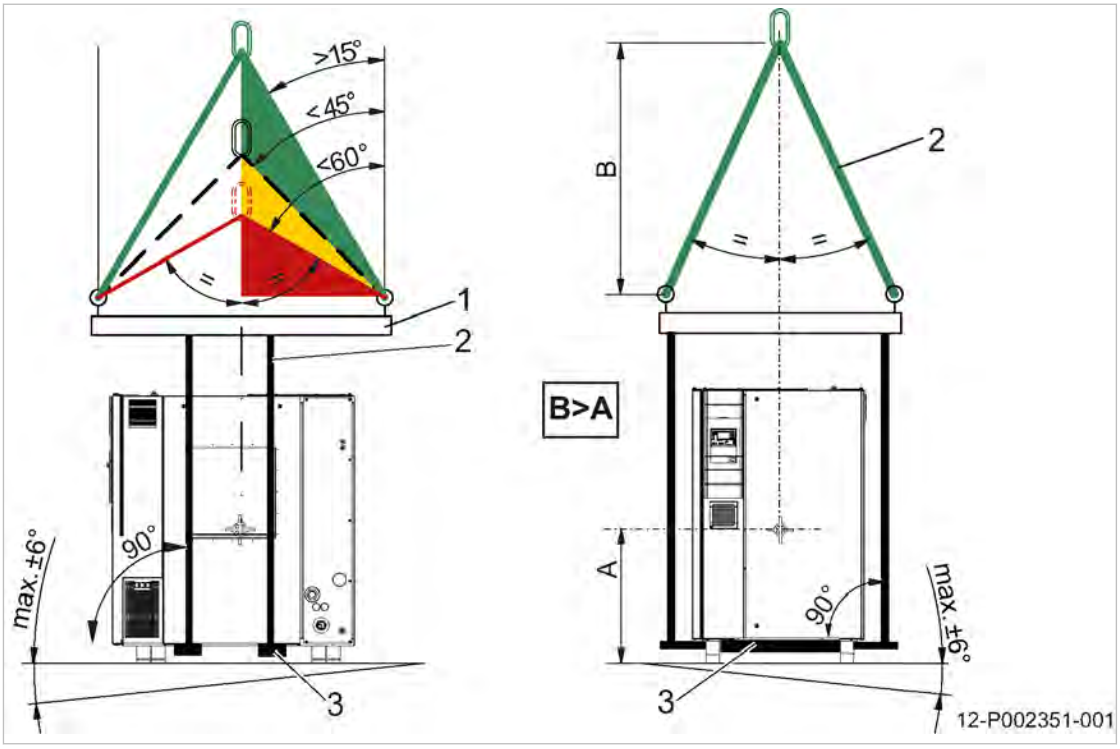


Fig. 62 Transport with a crane

1 Load carrying devices
2 Attachment resources
3 Crossbeam

1. **⚠ WARNING** *Risk of accident caused by incorrect use of load-carrying and attachment devices!*
   - ➤ *Comply with permissible load limits.*
   - ➤ *Comply with specific safety information of used load-carrying and attachment devices.*
2. Properly use load-carrying and attachment devices:
   - Ensure proper distribution of the fastening points relative to the centre of gravity position (symmetrical load distribution).
   - Ensure equal slope angles of 15° to 45° for attachment devices with multiple strands.
     - Slope angles between 45° and 60° may be unsuitable.
     - Slope angles larger than 60° are prohibited.
   - Ensure the maximum incline of 6° of the machine to the horizontal.
   - Ensure sufficient distance of the attachment devices to the machine.
   - Ensure a positive stability height: Dimension B **>** Dimension A
   - Do not attach the attachment devices to any machine component.
3. Carry out a lifting test:
   Slightly lift the machine to check whether machine remains in horizontal position and does not teeter.
4. Transport the machine only after a successful lifting test.

## 12.5 Disposal

When disposing of a machine, drain out all liquids and remove dirty filters.

Precondition The machine is decommissioned.

1. Completely drain the cooling oil from the machine.
2. Remove used filters.
3. Hand the machine over to an authorized disposal expert.

➤ Components contaminated with oil must be disposed of in accordance with local environmental protection regulations.

### 12.5.1 Battery disposal

Batteries contain substances that are harmful to living beings and the environment. For this reason, batteries must not be disposed of with unsorted residential waste. They must be disposed of in accordance with local environmental regulations. This procedure facilitates the handling and recycling of batteries.

Fig. 63 Battery disposal

1 Do not dispose of batteries with residential waste
2 Battery contains lead (if applicable)

➤ Dispose of batteries in accordance with local environmental regulations.

# 13 Annex

## 13.1 Pipeline and instrument flow diagram (P+I diagram)

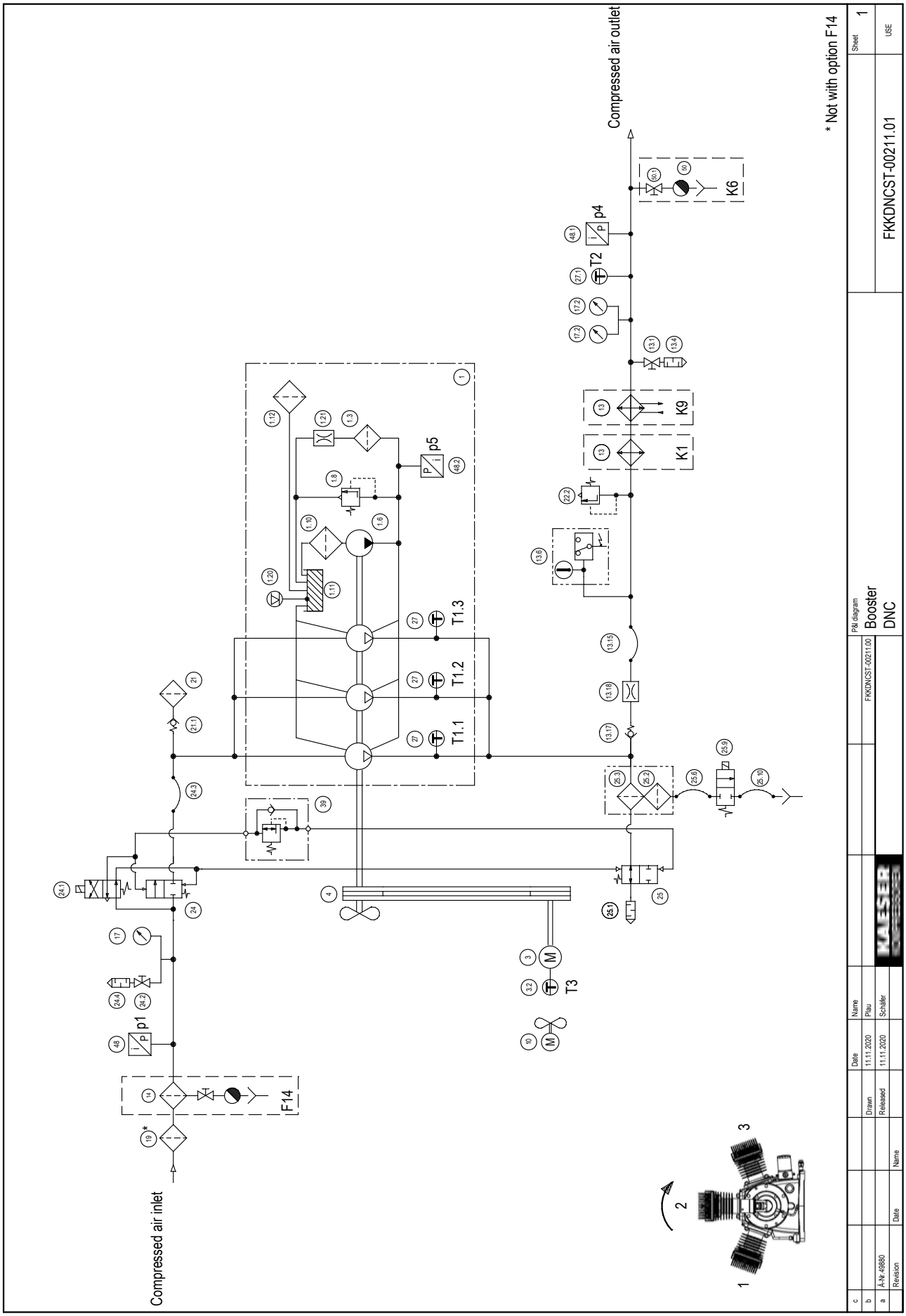
Compressed air inlet
Compressed air outlet
* Not with option F14
F14
K6
K9
K1
p1
p4
p5
T1.1
T1.2
T1.3
T2
T3
P&I diagram
Booster
DNC
FKKDNCST-00211.01
Sheet 1
USE
Name
Date
Drawn
Released
Schalter
A-Nr.:49860
Revision

| | |
|---|---|
| 1 | Compressor block |
| 1.3 | Oil filter |
| 1.6 | Oil pump |
| 1.8 | Bypass valve |
| 1.10 | Dirt trap (Compressor block) |
| 1.11 | Crankcase |
| 1.12 | Filter (Crankcase venting) |
| 1.20 | Oil level sensor (switching) |
| 1.21 | Nozzle |
| 3 | Compressor motor |
| 3.2 | Temperature Compressor motor [T3] |
| 4 | V-belt pulley |
| 10 | Fan motor |
| 13 | Compressed air aftercooler |
| 13.1 | Shut-off valve (Condensate outlet Compressed air aftercooler) |
| 13.4 | Silencer |
| 13.6 | Temperature switch |
| 13.15 | Hose line (Discharge side) |
| 13.17 | Check valve (Discharge side) |
| 13.18 | Nozzle Pulsation dampening (Discharge side) |
| 14 | KAESER FILTER KB with condensate drain |
| 17 | Pressure gauge Network pressure (Initial pressure) |
| 17.2 | Pressure gauge Network pressure (Final pressure) |
| 19* | Dirt trap (Suction side) |
| 21 | Air filter (Idle) |
| 21.1 | Check valve (Idle) |
| 22.2 | Safety relief valve (Compressed air outlet) |
| 24 | Inlet valve |
| 24.1 | Inlet control valve |
| 24.2 | Shut-off valve Ventilation (Suction side) |
| 24.3 | Hose line (Suction side) |
| 24.4 | Silencer |
| 25 | Unloading valve |
| 25.1 | Silencer (Pressure relief) |
| 25.2 | Dirt trap |
| 25.3 | Filter (Pressure relief) |
| 25.6 | Hose line (PN145) |
| 25.9 | Automatic condensate drain: Solenoid valve |
| 25.10 | Hose line (PN75) |
| 27 | Pt100 temperature sensor - Airend discharge temperature (Cylinder 1, 2, 3) [T1.1, T1.2, T1.3] |
| 27.1 | Pt100 temperature sensor - Compressed air outlet [T2] |
| 39 | Pressure regulating valve |
| 48 | Pressure transducer - Compressed air inlet [p1] |
| 48.1 | Pressure transducer - Compressed air outlet [p4] |
| 48.2 | Pressure transducer - Oil pressure [p5] |
| 50 | Electronic condensate drain ECO-DRAIN |
| 50.1 | Shut-off valve |
| Option | |
| F14 | KAESER FILTER KB (Electronic condensate drain ECO-DRAIN) |
| K1 | Air cooling |
| K6 | Electronic condensate drain |
| K9 | Water cooling: bundled-tube heat exchanger |

* Not with option F14

| | | | | | | | | | | | | |
|---|---|---|---|---|---|---|---|---|---|---|---|---|
| c | | | | | Date | Name | | | | P&I Diagram legend | | Sheet 2 |
| b | | | | Drawn | 11.11.2020 | Plau | | | FKKDNCST-00211.00 | Booster DNC | | |
| a | | | | Released | 11.11.2020 | Schäfer | | | | | FKKDNCST-00211.01 | USE |
| | Revision | Date | Name | | | | | | | | | |

## 13.2 Dimensional drawing

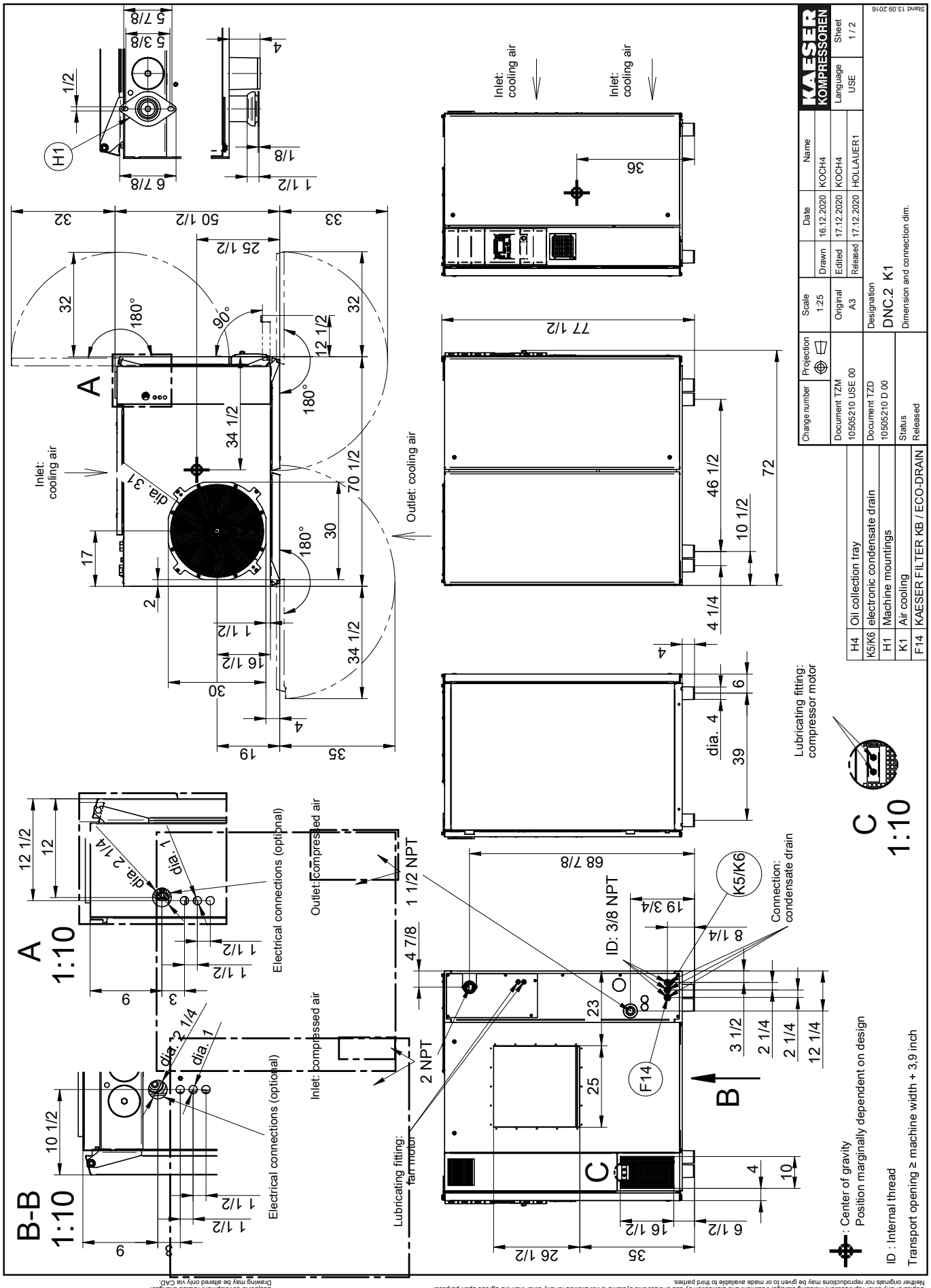
Inlet: cooling air
Outlet: cooling air
Electrical connections (optional)
Outlet: compressed air
Inlet: compressed air
Lubricating fitting: fan motor
Lubricating fitting: compressor motor
Connection: condensate drain
ID: 3/8 NPT
1 1/2 NPT
2 NPT
A 1:10
B-B 1:10
C 1:10
Center of gravity
Position marginally dependent on design
ID : Internal thread
Transport opening ≥ machine width + 3,9 inch
Change number
Projection
Scale 1:25
Original A3
Document TZM 10505210 USE 00
Document TZD 10505210 D 00
Designation DNC.2 K1
Dimension and connection dim.
Date
Name
Drawn 16.12.2020 KOCH4
Edited 17.12.2020 KOCH4
Released 17.12.2020 HOLLAUER1
Language USE
Sheet 1 / 2
Status Released
H4 Oil collection tray
K5/K6 electronic condensate drain
H1 Machine mountings
K1 Air cooling
F14 KAESER FILTER KB / ECO-DRAIN
Stand 13.09.2016

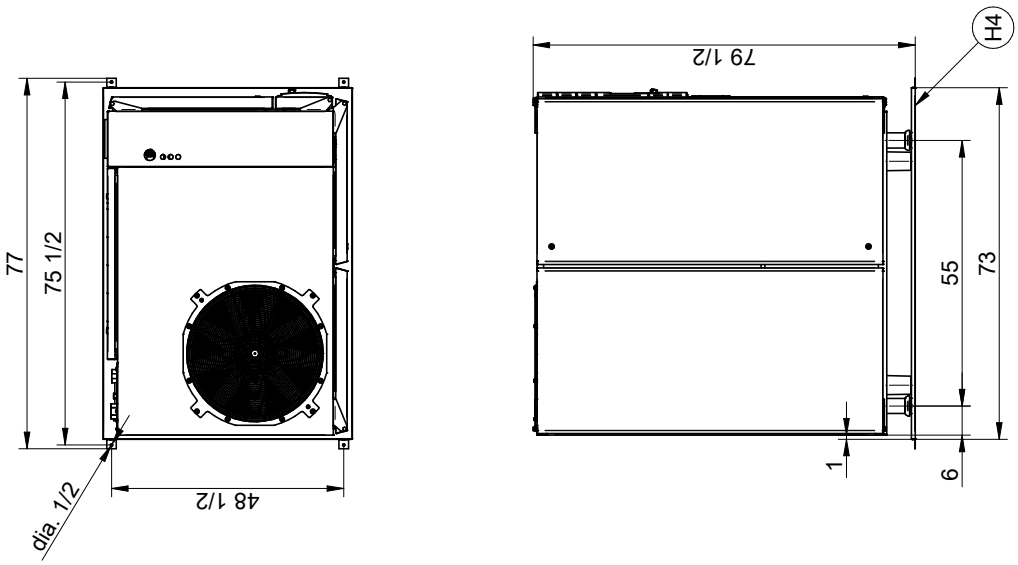


| | | | | | | | |
|---|---|---|---|---|---|---|---|
| H4 | Oil collection tray | | | | | | |
| K5/K6 | electronic condensate drain | | | | | | |
| H1 | Machine mountings | | | | | | |
| K1 | Air cooling | | | | | | |
| F14 | KAESER FILTER KB / ECO-DRAIN | | | | | | |

| Change number | Projection | Scale 1:25 | | Date | Name | KAESER KOMPRESSOREN | |
|---|---|---|---|---|---|---|---|
| Document TZM 10505210 USE 00 | | Original A3 | Drawn | 16.12.2020 | KOCH4 | Language USE | Sheet 2 / 2 |
| | | | Edited | 17.12.2020 | KOCH4 | | |
| Document TZD 10505210 D 00 | | Designation DNC.2 K1 | Released | 17.12.2020 | HOLLAUER1 | | |
| Status Released | | Dimension and connection dim. | | | | | |

Stand 13.09.2016

Drawings remain our exclusive property.
They are entrusted only for the agreed upon purpose.
Copies or any other reproduction, including storage, treatment and distribution by use of electronic systems is not allowed for any other than the agreed upon purpose.
Neither originals nor reproductions may be given to or made available to third parties.
Subject to development-related changes.
Drawing may be altered only via CAD.

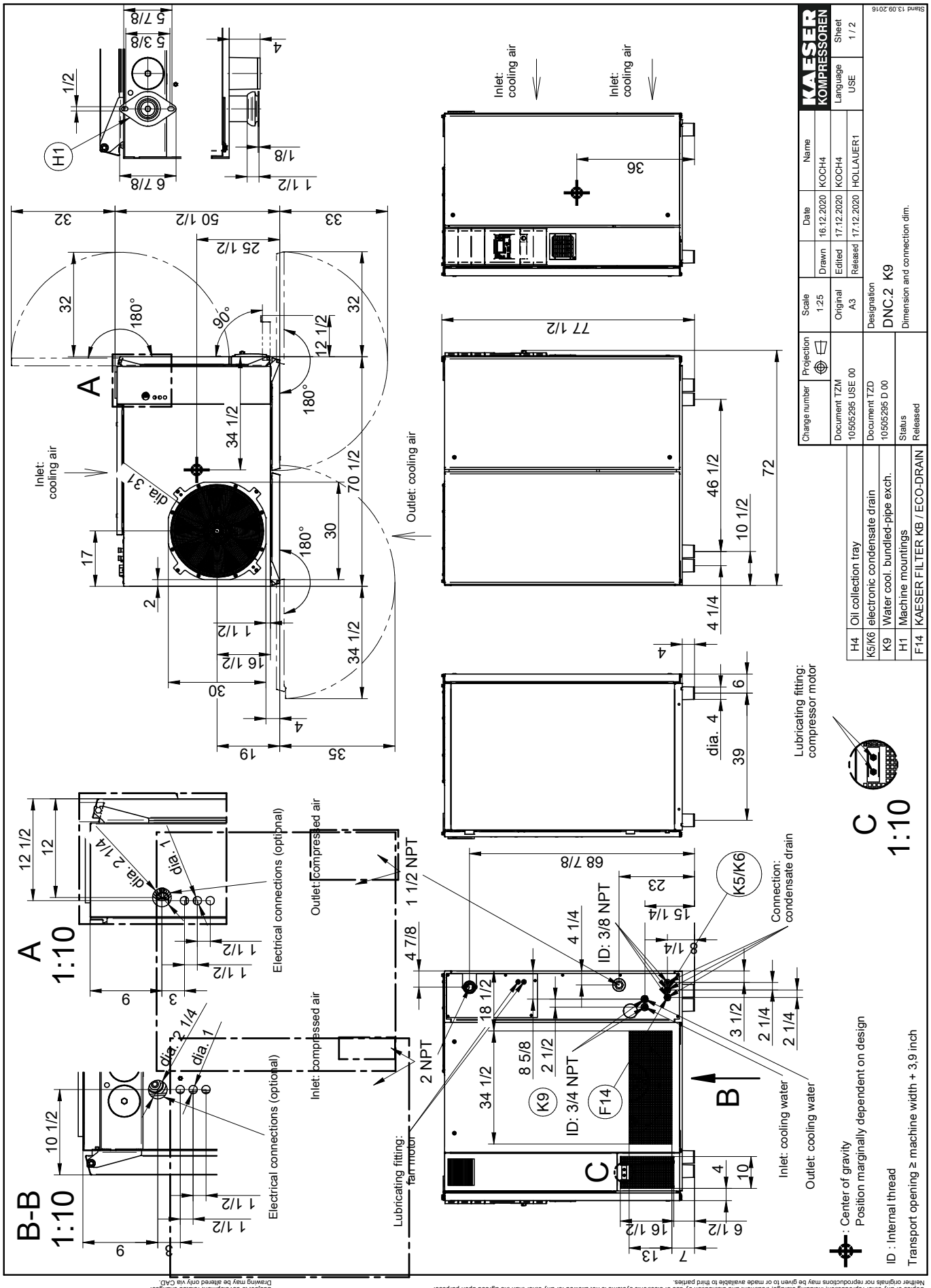


Drawings remain our exclusive property.
They are entrusted only for the agreed upon purpose.
Copies or any other reproduction, including storage, treatment and distribution by use of electronic systems is not allowed for any other than the agreed upon purpose.
Neither originals nor reproductions may be given to or made available to third parties.
Subject to development-related changes.
Drawing may be altered only via CAD.

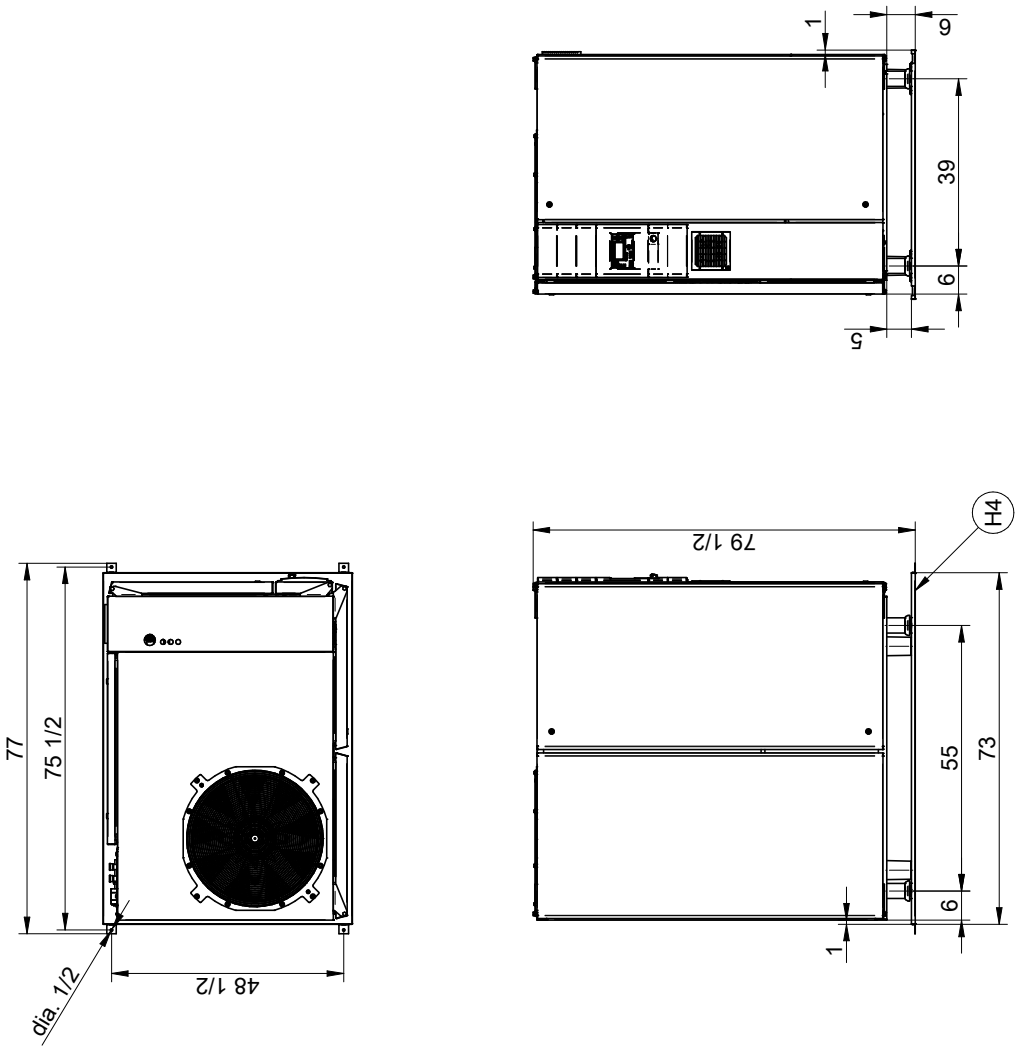


| | | | | | |
|---|---|---|---|---|---|
| H4 | Oil collection tray | | | | |
| K5/K6 | electronic condensate drain | | | | |
| K9 | Water cool. bundled-pipe exch. | | | | |
| H1 | Machine mountings | | | | |
| F14 | KAESER FILTER KB / ECO-DRAIN | | | | |

| | | | | | |
|---|---|---|---|---|---|
| Change number | | Scale 1:25 | | Date | Name |
| Projection | | | Drawn | 16.12.2020 | KOCH4 |
| Document TZM 10505295 USE 00 | | Original A3 | Edited | 17.12.2020 | KOCH4 |
| Document TZD 10505295 D 00 | | Designation DNC.2 K9 | Released | 17.12.2020 | HOLLAUER1 |
| Status Released | | Dimension and connection dim. | | | |

KAESER KOMPRESSOREN
Language USE
Sheet 2 / 2
Stand 13.09.2016

Drawings remain our exclusive property.
They are entrusted only for the agreed upon purpose.
Copies or any other reproduction, including storage, treatment and distribution by use of electronic systems is not allowed for any other than the agreed upon purpose.
Neither originals nor reproductions may be given to or made available to third parties.
Subject to development-related changes.
Drawing may be altered only via CAD.

## 13.3 Electrical Diagram

# Wiring Diagram

booster compressor DN22C/DN30C/DN37C/DN37CXL/DN45C

air cooled or water cooled

208V±10% 3ph 60Hz
380V±10% 3ph 60Hz
575V±10% 3ph 60Hz
230V±10% 3ph 60Hz
460V±10% 3ph 60Hz

Power supply:
WYE system with center point solidly grounded

manufacturer: KAESER COMPRESSORS
96450 Coburg
GERMANY

ATTENTION !!!
The document gives collective information on power supply voltages and frequencies for all machines. The voltage and frequency and local conditions under which any particular machine may be used are given on the nameplate of the machine and in the accompanying service manual.

The drawings remain our exclusive property. They are entrusted only for the agreed purpose. Copies or any other reproductions, including storage, treatment and dissemination by use of electronic systems must not be made for any other than the agreed purpose. Neither originals nor reproductions must be forwarded or otherwise made accessible to third parties.

| | | | | | |
|---|---|---|---|---|---|
| c | | | | Date | 22.01.21 USE |
| b | | | | Drawn | Sitter |
| a | | | | Released | Büchner |
| A | Change | Date | Name | | |

cover page
booster compressor

SC2 MCS | DKK-U3010.07 | page 1 / 1 Sht.

| Lfd. Nr.<br>No. | Benennung<br>Name | | Zeichnungsnummer (Kunde)<br>Drawing No. (customer) | Zeichnungsnummer (Hersteller)<br>Drawing No. (manufacturer) | Blatt<br>Page | Anlagenkennzeichen<br>Unit designation |
|---|---|---|---|---|---|---|
| 1 | cover page | | | DKK-U3010.07 | 1 | |
| 2 | list of contents | | | ZKK-U3010.07 | 1 | |
| 3 | general instructions | | | UKK-U3010.07 | 1 | |
| 4 | electrical equipment identification | | | UKK-U3010.07 | 2 | |
| 5 | electrical component parts list | | | UKK-U3010.07 | 3 | |
| 6 | electrical component parts list | | | UKK-U3010.07 | 4 | |
| 7 | electrical component parts list | | | UKK-U3010.07 | 5 | |
| 8 | electrical component parts list | | | UKK-U3010.07 | 6 | |
| 9 | electrical component parts list | | | UKK-U3010.07 | 7 | |
| 10 | electrical component parts list | | | UKK-U3010.07 | 8 | |
| 11 | wiring diagram | power supply/power unit | | SKK-U3010.07 | 1 | |
| 12 | wiring diagram | compressor motor | | SKK-U3010.07 | 2 | |
| 13 | wiring diagram | vent motor | | SKK-U3010.07 | 3 | |
| 14 | wiring diagram | control voltage tapping | | SKK-U3010.07 | 4 | |
| 15 | wiring diagram | safety chain | | SKK-U3010.07 | 5 | |
| 16 | wiring diagram | power supply unit | | SKK-U3010.07 | 6 | |
| 17 | wiring diagram | IO-module/configuration | | SKK-U3010.07 | 7 | |
| 18 | wiring diagram | sensors/actuators | | SKK-U3010.07 | 8 | |
| 19 | wiring diagram | sensors/actuators | | SKK-U3010.07 | 9 | |
| 20 | wiring diagram | sensors/actuators | | SKK-U3010.07 | 10 | |
| 21 | wiring diagram | volt-free contacts | | SKK-U3010.07 | 11 | |
| 22 | wiring diagram | inputs-/outputs IOM3 | | SKK-U3010.07 | 12 | |
| 23 | wiring diagram | digital inputs - option C40 | | SKK-U3010.07 | 13 | |
| 24 | wiring diagram | inputs/outputs - option C40 | | SKK-U3010.07 | 14 | |
| 25 | wiring diagram | transformer diagrams | | SKK-U3010.07 | 15 | |
| 26 | wiring diagram | Handling: Terminals | | SKK-U3010.07 | 16 | |
| 27 | wiring diagram | Feed line connection | | SKK-U3010.07 | 17 | |
| 28 | wiring diagram | Feed line connection | | SKK-U3010.07 | 18 | |
| 29 | wiring diagram | Feed line connection | | SKK-U3010.07 | 19 | |
| 30 | terminal connection | terminal strip -X0,-X11,-X12 | | KKK-U3010.07 | 1 | |
| 31 | lay-out | Switchboard | | AKK-U3010.07 | 1 | |
| 32 | lay-out | Switchboard | | AKK-U3010.07 | 2 | |

| | | | | | | | | |
|---|---|---|---|---|---|---|---|---|
| c | | | | Date | 22.01.21 | KAESER KOMPRESSOREN | list of contents<br>booster compressor | = |
| b | | | | Drawn | Sitter | | | + |
| a | | | | Released | Büchner | | SC2 MCS | ZKK-U3010.07 | page 1 |
| B | Change | Date | Name | | | | | 1 Sht. |

| 1 | 2 | 3 | 4 | 5 | 6 | 7 | 8 |
|---|---|---|---|---|---|---|---|

## general instructions

ATTENTION !!!
Install supplies, grounding and shock protection
to local safety regulations.
Do not make or break
live plug-in connectors.

control cabinet wiring for non-designated conductors

| | |
|---|---|
| primary circuits ungrounded: | black, UL-Style 1015, CSA-TEW |
| primary circuits grounded: | grey, UL-Style 1015, CSA-TEW |
| control voltage AC 115V ungrounded: | red, 18AWG UL-Style 1015, CSA-TEW |
| control voltage AC 115V grounded: | white, 18AWG UL-Style 1015, CSA-TEW |
| control voltage DC ungrounded: | blue, 18AWG UL-Style 1015, CSA-TEW |
| control voltage DC grounded: | white/blue, 18AWG UL-Style 1015, CSA-TEW |
| external voltage: | orange, 16AWG UL-Style 1015, CSA-TEW |
| measuring circuits: | violet, 18AWG UL-Style 1015, CSA-TEW |
| ground conductor: | green/yellow, UL-Style 1015, CSA-TEW |

option C40 = Nitrogen version

option K6 = Electronic condensate drain

option F14 = KAESER FILTER KB

| | | | | | |
|---|---|---|---|---|---|
| c | | | | Date | 22.01.21 |
| b | | | | Drawn | Sitter |
| a | | | | Released | Büchner |
| C | Change | Date | Name | | |

KAESER KOMPRESSOREN

general instructions
booster compressor

SC2 MCS

UKK-U3010.07

=
+

page 1
8 Sht.

# electrical equipment identification

## general components

| | |
|---|---|
| -B25 | overload relay, compressor motor |
| -K50 | coupling relay, temperature Compressed air aftercooler |
| -F4 | circuit breaker, vent motor |
| -1FU,-2FU | primary control fuse |
| -3FU | secondary control fuse |
| -M1 | compressor motor |
| -M4 | vent motor |
| -M7 | controller ventilator |
| -Q1 | main contactor |
| -Q2 | delta contactor |
| -Q3 | wye contactor |
| -Q4 | starter vent motor |
| -S1 | EMERGENCY STOP pushbutton |
| -S5 | door safety interlock switch |
| -T11 | control transformer |
| -T21,-T22 | power unit |

## terminal strips

| | |
|---|---|
| -X0 | terminal strip, power supply |
| -X11 | terminal strip, control |
| -X12 | terminal strip, control 24VDC |

## control

| | |
|---|---|
| -K20 | *Main Control System SC2MCS* |
| -X1 | Ethernet |
| -X2 | IO-Bus |
| -X3 | RS485-FC (USS) |
| -X4 | communication module (Bus) |
| -X5 | SD card slot |
| -X6 | ground connection |
| -K21 | *IO-module SC2IOM-3* |
| | inside |
| -X1 | IO-Bus, input |
| -X2 | IO-Bus, output |
| -X3 | analog input, Pt100 |
| -X4 | power supply unit, digital outputs |
| -X5,-X9 | Relay outputs |
| -X6 | analog input, analog output 4-20mA |
| -X8 | digital inputs |
| | external |
| -X11...-X14 | analog inputs, 4-20mA |
| -X15 | analog output |
| -X18,-X19 | digital inputs |
| -X20,-X21 | digital outputs |
| -X22...-X32 | analog inputs, Pt100 |
| -K22 | *IO-module SC2IOM-1* |
| | inside |
| -X1 | IO-Bus, input |
| -X2 | IO-Bus, output |
| -X3,-X8 | digital inputs |
| -X4 | power supply unit, digital outputs |
| -X5,-X9 | Relay outputs |
| -X6 | analog input, 4-20mA |
| -X7 | analog input, Pt100 |
| | external |
| -X11...-X13 | analog inputs, 4-20mA |
| -X14...-X17 | analog inputs, Pt100 |
| -X18...-X29 | digital inputs |
| -X30...-X32 | digital outputs |

## sensors/actuators

| | |
|---|---|
| -B1 | pressure transducer, Compressed air outlet |
| -B2 | pressure transducer, Compressed air inlet |
| -B3 | pressure transducer, oil pressure |
| -B4 | pressure transducer, Pressure side return circuit |
| -B5 | pressure transducer, Intake side return circuit |
| -B40.1 | temperature probe, airend discharge temperature 1 |
| -B40.2 | temperature probe, airend discharge temperature 2 |
| -B40.3 | temperature probe, airend discharge temperature 3 |
| -B42 | temperature probe, compressed air outlet temperature |
| -B50 | temperature switch Compressed air aftercooler |
| -B60 | temperature probe, compressor motor |
| -B70 | oil level switch |
| -K1 | Inlet control valve |
| -K2 | Return valve |
| -K3 | Relief control valve |
| -K10 | condensate drain filter |
| -K11 | condensate drain Compressed air outlet |
| -K12 | condensate drain Prefilter |

| | | | | | |
|---|---|---|---|---|---|
| c | | | | Date | 22.01.21 |
| b | | | | Drawn | Sitter |
| a | | | | Released | Büchner |
| C | Change | Date | Name | | |

KAESER KOMPRESSOREN

electrical equipment identification
booster compressor

SC2 MCS | UKK-U3010.07 | page 2 / 8 Sht.

## electrical component parts list

| model | DN 22 C | DN 30 C | DN37C / DN37CXL | DN 45 C |
|---|---|---|---|---|
| machine power supply | 208 V ±10 %, 60 Hz | 208 V ±10 %, 60 Hz | 208 V ±10 %, 60 Hz | 208 V ±10 %, 60 Hz |
| motor -M1 | 30 hp | 40 hp | 50 hp | 60 hp |
| motor -M4 | 2 hp | 2 hp | 2 hp | 2 hp |
| lay-out | page 2 | page 2 | page 2 | page 2 |
| supply terminals -X0:U1/V1/W1 | 3x 894385.0<br>285-195 (WAGO) | 3x 895545.0<br>285-1185 (WAGO) | 3x 895545.0<br>285-1185 (WAGO) | 3x 895545.0<br>285-1185 (WAGO) |
| Torque | --- | --- | --- | --- |
| Stripped length | 35 mm | 42 mm | 42 mm | 42 mm |
| Handling | fig. 2, Sht. 16 | fig. 2, Sht. 16 | fig. 2, Sht. 16 | fig. 2, Sht. 16 |
| GRD rail | 7.8952.00020 | 7.8952.00010 | 7.8952.00010 | 7.8952.00010 |
| IHI | S500-53-63 | S300-41-44 | S300-41-44 | S300-41-44 |
| Torque | fig. 22, Sht. 19 | fig. 21, Sht. 19 | fig. 21, Sht. 19 | fig. 21, Sht. 19 |
| Stripped length | minimal 32 mm | minimal 26 mm | minimal 26 mm | minimal 26 mm |
| supply connection | fig. 12+ 13, Sht. 18 | fig. 12+ 13, Sht. 18 | fig. 12+ 13, Sht. 18 | fig. 12+ 13, Sht. 18 |
| terminal strip -X11 | 7.7113.00101 Wieland | 7.7113.00101 Wieland | 7.7113.00101 Wieland | 7.7113.00101 Wieland |
| Handling | fig. 1, Sht. 16 | fig. 1, Sht. 16 | fig. 1, Sht. 16 | fig. 1, Sht. 16 |
| contactor -Q1/-Q2 | 7.3140.02140<br>3RT1054-1AF36 | 7.3140.02140<br>3RT1054-1AF36 | 7.3140.02140<br>3RT1054-1AF36 | 7.3140.02140<br>3RT1054-1AF36 |
| interference suppressor | 7.3140.02020 | 7.3140.02020 | 7.3140.02020 | 7.3140.02020 |
| Siemens | 3RT1956-1CC00 | 3RT1956-1CC00 | 3RT1956-1CC00 | 3RT1956-1CC00 |
| contactor -Q3 | 7.8740.00440<br>3RT2045-1AK60 | 7.8740.00440<br>3RT2045-1AK60 | 7.8740.00440<br>3RT2045-1AK60 | 7.8740.00440<br>3RT2045-1AK60 |
| interference suppressor | 7.8740.05170 | 7.8740.05170 | 7.8740.05170 | 7.8740.05170 |
| Siemens | 3RT2946-1CC00 | 3RT2946-1CC00 | 3RT2946-1CC00 | 3RT2946-1CC00 |
| contactor -Q4 | 7.8740.00340<br>3RT2023-1AK60 | 7.8740.00340<br>3RT2023-1AK60 | 7.8740.00340<br>3RT2023-1AK60 | 7.8740.00340<br>3RT2023-1AK60 |
| interference suppressor | 7.8740.05140 | 7.8740.05140 | 7.8740.05140 | 7.8740.05140 |
| Siemens | 3RT2926-1CC00 | 3RT2926-1CC00 | 3RT2926-1CC00 | 3RT2926-1CC00 |
| coupling relay -K50 | 7.3149.01670 | 7.3149.01670 | 7.3149.01670 | 7.3149.01670 |
| Wieland | flare 110 V-1W-250 V6 A-F | flare 110 V-1W-250 V6 A-F | flare 110 V-1W-250 V6 A-F | flare 110 V-1W-250 V6 A-F |
| overload relay -B25 | 7.8741.00140 | 7.6873.00230 | 7.6873.00230 | 7.6873.00230 |
| Siemens | 3RB3046-1XB0 (32-115 A) | 3RB2056-1FC2 (50-200 A) | 3RB2056-1FC2 (50-200 A) | 3RB2056-1FC2 (50-200 A) |
| | setting: 47 A | | setting: 72 A | setting: 89 A |
| motor -M1 7.9991.10040 | | setting: 61 A | | |
| motor -M1 7.9991.00140 | | setting: 64 A | | |
| | NEC 430.32(C) incremental<br>setting: 53 A | NEC 430.32(C) incremental | NEC 430.32(C) incremental<br>setting: 81 A | NEC 430.32(C) incremental<br>setting: 99 A |
| motor -M1 7.9991.10040 | | setting: 68 A | | |
| motor -M1 7.9991.00140 | | setting: 71 A | | |
| fuses -1FU/-2FU/-3FU | 7.3313.1 | 7.3313.1 | 7.3313.1 | 7.3313.1 |
| Ferraz | ATQR 2 1/2 (2.5 A, 600 V) | ATQR 2 1/2 (2.5 A, 600 V) | ATQR 2 1/2 (2.5 A, 600 V) | ATQR 2 1/2 (2.5 A, 600 V) |
| fuse socket -1FU...-3FU | 7.3320.00060 | 7.3320.00060 | 7.3320.00060 | 7.3320.00060 |
| Wöhner | AMBUS EASYSWITCH | AMBUS EASYSWITCH | AMBUS EASYSWITCH | AMBUS EASYSWITCH |
| circuit breaker -F4 | 7.8742.01180<br>3RV2021-1HA10 (5.5-8 A)<br>setting: 5.9 A | 7.8742.01180<br>3RV2021-1HA10 (5.5-8 A)<br>setting: 5.9 A | 7.8742.01180<br>3RV2021-1HA10 (5.5-8 A)<br>setting: 5.9 A | 7.8742.01180<br>3RV2021-1HA10 (5.5-8 A)<br>setting: 5.9 A |
| | NEC 430.32(C) incremental<br>setting: 6.6 A | NEC 430.32(C) incremental<br>setting: 6.6 A | NEC 430.32(C) incremental<br>setting: 6.6 A | NEC 430.32(C) incremental<br>setting: 6.6 A |
| terminal block | 7.3140.05090<br>3RV2928-1H | 7.3140.05090<br>3RV2928-1H | 7.3140.05090<br>3RV2928-1H | 7.3140.05090<br>3RV2928-1H |
| auxiliary switch | 7.8742.05000 | 7.8742.05000 | 7.8742.05000 | 7.8742.05000 |
| Siemens | 3RV2901-1E | 3RV2901-1E | 3RV2901-1E | 3RV2901-1E |
| transformer -T11 | 7.7569.0<br>B0601024 (250 VA) | 7.7569.0<br>B0601024 (250 VA) | 7.7569.0<br>B0601024 (250 VA) | 7.7569.0<br>B0601024 (250 VA) |
| Block | diagram 1, Sht. 15 | diagram 1, Sht. 15 | diagram 1, Sht. 15 | diagram 1, Sht. 15 |
| power supply -T21/-T22 | 7.7605P0 | 7.7605P0 | 7.7605P0 | 7.7605P0 |
| Prodrive | PSDC24/2.5 | PSDC24/2.5 | PSDC24/2.5 | PSDC24/2.5 |
| connection -W11 | 1 AWG black<br>600 V, 90°C | 1 AWG black<br>600 V, 90°C | 1 AWG black<br>600 V, 90°C | 1 AWG black<br>600 V, 90°C |
| connection -W13 | 4 AWG black<br>600 V, 90°C | 3/0 AWG black<br>600 V, 90°C | 3/0 AWG black<br>600 V, 90°C | 3/0 AWG black<br>600 V, 90°C |
| connection -W14 | 4 AWG black<br>600 V, 90°C | 4 AWG black<br>600 V, 90°C | 4 AWG black<br>600 V, 90°C | 4 AWG black<br>600 V, 90°C |
| cables -W19.1/.2 | 4 AWG<br>600 V, 90°C | 1 AWG<br>600 V, 90°C | 1 AWG<br>600 V, 90°C | 1 AWG<br>600 V, 90°C |
| controller ventilator -M7 | 7.3146.00660 / LV300 | 7.3146.00660 / LV300 | 7.3146.00660 / LV300 | 7.3146.00660 / LV300 |
| outlet filter Rübsamen&Herr | 7.2752.00010 / GV300 | 7.2752.00010 / GV300 | 7.2752.00010 / GV300 | 7.2752.00010 / GV300 |

page 3 / 8 Sht.

UKK-U3010.07

SC2 MCS

electrical component parts list

booster compressor

KAESER KOMPRESSOREN

| | Date | Name |
|---|---|---|
| Drawn | 22.01.21 | Sitter |
| Released | | Büchner |

| | Change | Date |
|---|---|---|
| c | | |
| b | | |
| a | | |

| model | | electrical component parts list<br>DN 22 C | DN 30 C | DN37C / DN37CXL | DN 45 C |
|---|---|---|---|---|---|
| machine power supply | | **230 V ±10 %, 60 Hz** | **230 V ±10 %, 60 Hz** | **230 V ±10 %, 60 Hz** | **230 V ±10 %, 60 Hz** |
| motor | -M1 | 30 hp | 40 hp | 50 hp | 60 hp |
| motor | -M4 | 2 hp | 2 hp | 2 hp | 2 hp |
| lay-out | | page 2 | page 2 | page 2 | page 2 |
| supply terminals | -X0:U1/V1/W1 | 3x 894385.0<br>285-195 (WAGO) | 3x 895545.0<br>285-1185 (WAGO) | 3x 895545.0<br>285-1185 (WAGO) | 3x 895545.0<br>285-1185 (WAGO) |
| | Torque | --- | --- | --- | --- |
| | Stripped length | 35 mm | 42 mm | 42 mm | 42 mm |
| | Handling | fig. 2, Sht. 16 | fig. 2, Sht. 16 | fig. 2, Sht. 16 | fig. 2, Sht. 16 |
| | GRD rail | 7.8952.00020 | 7.8952.00010 | 7.8952.00010 | 7.8952.00010 |
| | IHI | S500-53-63 | S300-41-44 | S300-41-44 | S300-41-44 |
| | Torque | fig. 22, Sht. 19 | fig. 21, Sht. 19 | fig. 21, Sht. 19 | fig. 21, Sht. 19 |
| | Stripped length | minimal 32 mm | minimal 26 mm | minimal 26 mm | minimal 26 mm |
| supply | connection | fig. 12+ 13, Sht. 18 | fig. 12+ 13, Sht. 18 | fig. 12+ 13, Sht. 18 | fig. 12+ 13, Sht. 18 |
| terminal strip | -X11 | 7.7113.00101 Wieland | 7.7113.00101 Wieland | 7.7113.00101 Wieland | 7.7113.00101 Wieland |
| | Handling | fig. 1, Sht. 16 | fig. 1, Sht. 16 | fig. 1, Sht. 16 | fig. 1, Sht. 16 |
| contactor | -Q1/-Q2 | 7.3140.02140<br>3RT1054-1AF36 | 7.3140.02140<br>3RT1054-1AF36 | 7.3140.02140<br>3RT1054-1AF36 | 7.3140.02140<br>3RT1054-1AF36 |
| interference suppressor | | 7.3140.02020 | 7.3140.02020 | 7.3140.02020 | 7.3140.02020 |
| | Siemens | 3RT1956-1CC00 | 3RT1956-1CC00 | 3RT1956-1CC00 | 3RT1956-1CC00 |
| contactor | -Q3 | 7.8740.00440<br>3RT2045-1AK60 | 7.8740.00440<br>3RT2045-1AK60 | 7.8740.00440<br>3RT2045-1AK60 | 7.8740.00440<br>3RT2045-1AK60 |
| interference suppressor | | 7.8740.05170 | 7.8740.05170 | 7.8740.05170 | 7.8740.05170 |
| | Siemens | 3RT2946-1CC00 | 3RT2946-1CC00 | 3RT2946-1CC00 | 3RT2946-1CC00 |
| contactor | -Q4 | 7.8740.00340<br>3RT2023-1AK60 | 7.8740.00340<br>3RT2023-1AK60 | 7.8740.00340<br>3RT2023-1AK60 | 7.8740.00340<br>3RT2023-1AK60 |
| interference suppressor | | 7.8740.05140 | 7.8740.05140 | 7.8740.05140 | 7.8740.05140 |
| | Siemens | 3RT2926-1CC00 | 3RT2926-1CC00 | 3RT2926-1CC00 | 3RT2926-1CC00 |
| coupling relay | -K50 | 7.3149.01670 | 7.3149.01670 | 7.3149.01670 | 7.3149.01670 |
| | Wieland | flare 110 V-1W-250 V6 A-F | flare 110 V-1W-250 V6 A-F | flare 110 V-1W-250 V6 A-F | flare 110 V-1W-250 V6 A-F |
| overload relay | -B25 | 7.8741.00140 | 7.6873.00230 | 7.6873.00230 | 7.6873.00230 |
| | Siemens | 3RB3046-1XB0 (32-115 A) | 3RB2056-1FC2 (50-200 A) | 3RB2056-1FC2 (50-200 A) | 3RB2056-1FC2 (50-200 A) |
| | | setting: 49 A | | setting: 66 A | setting: 81 A |
| motor -M1 | 7.9991.10040 | | setting: 56 A | | |
| motor -M1 | 7.9991.00140 | | setting: 65 A | | |
| | | NEC 430.32(C) incremental<br>setting: 55 A | NEC 430.32(C) incremental | NEC 430.32(C) incremental<br>setting: 73 A | NEC 430.32(C) incremental<br>setting: 91 A |
| motor -M1 | 7.9991.10040 | | setting: 62 A | | |
| motor -M1 | 7.9991.00140 | | setting: 73 A | | |
| fuses | -1FU/-2FU/-3FU | 7.3313.1 | 7.3313.1 | 7.3313.1 | 7.3313.1 |
| | Ferraz | ATQR 2 1/2 (2.5 A, 600 V) | ATQR 2 1/2 (2.5 A, 600 V) | ATQR 2 1/2 (2.5 A, 600 V) | ATQR 2 1/2 (2.5 A, 600 V) |
| fuse socket | -1FU...-3FU | 7.3320.00060 | 7.3320.00060 | 7.3320.00060 | 7.3320.00060 |
| | Wöhner | AMBUS EASYSWITCH | AMBUS EASYSWITCH | AMBUS EASYSWITCH | AMBUS EASYSWITCH |
| circuit breaker | -F4 | 7.8742.01180<br>3RV2021-1HA10 (5.5-8 A)<br>setting: 5.7 A | 7.8742.01180<br>3RV2021-1HA10 (5.5-8 A)<br>setting: 5.7 A | 7.8742.01180<br>3RV2021-1HA10 (5.5-8 A)<br>setting: 5.7 A | 7.8742.01180<br>3RV2021-1HA10 (5.5-8 A)<br>setting: 5.7 A |
| | | NEC 430.32(C) incremental<br>setting: 6.4 A | NEC 430.32(C) incremental<br>setting: 6.4 A | NEC 430.32(C) incremental<br>setting: 6.4 A | NEC 430.32(C) incremental<br>setting: 6.4 A |
| terminal block | | 7.3140.05090<br>3RV2928-1H | 7.3140.05090<br>3RV2928-1H | 7.3140.05090<br>3RV2928-1H | 7.3140.05090<br>3RV2928-1H |
| auxiliary switch | | 7.8742.05000 | 7.8742.05000 | 7.8742.05000 | 7.8742.05000 |
| | Siemens | 3RV2901-1E | 3RV2901-1E | 3RV2901-1E | 3RV2901-1E |
| transformer | -T11 | 7.7569.0<br>B0601024 (250 VA) | 7.7569.0<br>B0601024 (250 VA) | 7.7569.0<br>B0601024 (250 VA) | 7.7569.0<br>B0601024 (250 VA) |
| | Block | diagram 1, Sht. 15 | diagram 1, Sht. 15 | diagram 1, Sht. 15 | diagram 1, Sht. 15 |
| power supply | -T21/-T22 | 7.7605P0 | 7.7605P0 | 7.7605P0 | 7.7605P0 |
| | Prodrive | PSDC24/2.5 | PSDC24/2.5 | PSDC24/2.5 | PSDC24/2.5 |
| connection | -W11 | 1 AWG black<br>600 V, 90°C | 1 AWG black<br>600 V, 90°C | 1 AWG black<br>600 V, 90°C | 1 AWG black<br>600 V, 90°C |
| connection | -W13 | 4 AWG black<br>600 V, 90°C | 3/0 AWG black<br>600 V, 90°C | 3/0 AWG black<br>600 V, 90°C | 3/0 AWG black<br>600 V, 90°C |
| connection | -W14 | 4 AWG black<br>600 V, 90°C | 4 AWG black<br>600 V, 90°C | 4 AWG black<br>600 V, 90°C | 4 AWG black<br>600 V, 90°C |
| cables | -W19.1/.2 | 4 AWG<br>600 V, 90°C | 2 AWG<br>600 V, 90°C | 2 AWG<br>600 V, 90°C | 1 AWG<br>600 V, 90°C |
| controller ventilator | -M7 | 7.3146.00660 / LV300 | 7.3146.00660 / LV300 | 7.3146.00660 / LV300 | 7.3146.00660 / LV300 |
| outlet filter | Rübsamen&Herr | 7.2752.00010 / GV300 | 7.2752.00010 / GV300 | 7.2752.00010 / GV300 | 7.2752.00010 / GV300 |

page 4 / 8 Sht.

UKK-U3010.07

SC2 MCS

electrical component parts list
booster compressor

KAESER KOMPRESSOREN

| | Date | Name |
|---|---|---|
| Drawn | 22.01.21 | Silter |
| Released | | Büchner |

| | Change | Date |
|---|---|---|
| c | | |
| b | | |
| a | | |

| model | | electrical component parts list<br>DN 22 C | DN 30 C | DN37C / DN37CXL | DN 45 C |
|---|---|---|---|---|---|
| machine power supply | | **380 V ±10 %, 60 Hz** | **380 V ±10 %, 60 Hz** | **380 V ±10 %, 60 Hz** | **380 V ±10 %, 60 Hz** |
| motor | -M1 | 30 hp | 40 hp | 50 hp | 60 hp |
| motor | -M4 | 2 hp | 2 hp | 2 hp | 2 hp |
| lay-out | | page 1 | page 1 | page 1 | page 1 |
| supply terminals | -X0:U1/V1/W1 | 7.3140.05070<br>3RV2935-5E (Siemens) | 3x 7.3140.05360<br>3RA2943-3L (Siemens) | 7.3140.05070<br>3RV2935-5E (Siemens) | 3x 7.3140.05360<br>3RA2943-3L (Siemens) |
| | **Torque** | 53 lb-in | 89 lb-in | 53 lb-in | 89 lb-in |
| | **Stripped length** | 25 mm | 25 mm | 25 mm | 25 mm |
| | **GRD rail** | 7.8952.0 | 7.8952.0 | 7.8952.0 | 7.8952.0 |
| | **IHI** | S2/0-34-44 | S2/0-34-44 | S2/0-34-44 | S2/0-34-44 |
| | **Torque** | fig. 20, Sht. 19 | fig. 20, Sht. 19 | fig. 20, Sht. 19 | fig. 20, Sht. 19 |
| | **Stripped length** | minimal 16 mm | minimal 16 mm | minimal 16 mm | minimal 16 mm |
| supply | **connection** | fig. 10+ 11, Sht. 17 | fig. 10+ 11, Sht. 17 | fig. 10+ 11, Sht. 17 | fig. 10+ 11, Sht. 17 |
| terminal strip | -X11 | 7.7113.00101 Wieland | 7.7113.00101 Wieland | 7.7113.00101 Wieland | 7.7113.00101 Wieland |
| | **Handling** | fig. 1, Sht. 16 | fig. 1, Sht. 16 | fig. 1, Sht. 16 | fig. 1, Sht. 16 |
| contactor | -Q1/-Q2 | 7.8740.00410<br>3RT2036-1AK60 | 7.8740.00440<br>3RT2045-1AK60 | 7.8740.00420<br>3RT2037-1AK60 | 7.8740.00440<br>3RT2045-1AK60 |
| interference suppressor | | 7.8740.05150 | 7.8740.05170 | 7.8740.05150 | 7.8740.05170 |
| | **Siemens** | 3RT2936-1CC00 | 3RT2946-1CC00 | 3RT2936-1CC00 | 3RT2946-1CC00 |
| auxiliary switch | -Q1 | 7.8740.05010 | 7.8740.05010 | 7.8740.05010 | 7.8740.05010 |
| | **Siemens** | 3RH2911-1HA11 | 3RH2911-1HA11 | 3RH2911-1HA11 | 3RH2911-1HA11 |
| contactor | -Q3 | 7.8740.00400<br>3RT2035-1AK60 | 7.8740.00400<br>3RT2035-1AK60 | 7.8740.00400<br>3RT2035-1AK60 | 7.8740.00400<br>3RT2035-1AK60 |
| interference suppressor | | 7.8740.05150 | 7.8740.05150 | 7.8740.05150 | 7.8740.05150 |
| | **Siemens** | 3RT2936-1CC00 | 3RT2936-1CC00 | 3RT2936-1CC00 | 3RT2936-1CC00 |
| contactor | -Q4 | 7.8740.00340<br>3RT2023-1AK60 | 7.8740.00340<br>3RT2023-1AK60 | 7.8740.00340<br>3RT2023-1AK60 | 7.8740.00340<br>3RT2023-1AK60 |
| interference suppressor | | 7.8740.05140 | 7.8740.05140 | 7.8740.05140 | 7.8740.05140 |
| | **Siemens** | 3RT2926-1CC00 | 3RT2926-1CC00 | 3RT2926-1CC00 | 3RT2926-1CC00 |
| coupling relay | -K50 | 7.3149.01670 | 7.3149.01670 | 7.3149.01670 | 7.3149.01670 |
| | **Wieland** | flare 110 V-1W-250 V6 A-F | flare 110 V-1W-250 V6 A-F | flare 110 V-1W-250 V6 A-F | flare 110 V-1W-250 V6 A-F |
| overload relay | -B25 | 7.8741.00090 | 7.8741.00140 | 7.8741.00100 | 7.8741.00140 |
| | **Siemens** | 3RB3036-1UB0 (12-50 A) | 3RB3046-1XB0 (32-115 A) | 3RB3036-1WB0 (20-80 A) | 3RB3046-1XB0 (32-115 A) |
| | | setting: 24 A | | setting: 40 A | setting: 49 A |
| motor -M1 | **7.9991.10020** | | setting: 34 A | | |
| motor -M1 | **7.9991.00120** | | setting: 51 A | | |
| | | NEC 430.32(C) incremental<br>setting: 27 A | NEC 430.32(C) incremental | NEC 430.32(C) incremental<br>setting: 45 A | NEC 430.32(C) incremental<br>setting: 55 A |
| motor -M1 | **7.9991.10020** | | setting: 38 A | | |
| motor -M1 | **7.9991.00120** | | setting: 57 A | | |
| fuses | -1FU/-2FU | 7.3316.1 | 7.3316.1 | 7.3316.1 | 7.3316.1 |
| | **Ferraz** | ATQR 1 1/2 (1.5 A, 600 V) | ATQR 1 1/2 (1.5 A, 600 V) | ATQR 1 1/2 (1.5 A, 600 V) | ATQR 1 1/2 (1.5 A, 600 V) |
| fuses | -3FU | 7.3313.1 | 7.3313.1 | 7.3313.1 | 7.3313.1 |
| | **Ferraz** | ATQR 2 1/2 (2.5 A, 600 V) | ATQR 2 1/2 (2.5 A, 600 V) | ATQR 2 1/2 (2.5 A, 600 V) | ATQR 2 1/2 (2.5 A, 600 V) |
| fuse socket | -1FU...-3FU | 7.3320.00060 | 7.3320.00060 | 7.3320.00060 | 7.3320.00060 |
| | **Wöhner** | AMBUS EASYSWITCH | AMBUS EASYSWITCH | AMBUS EASYSWITCH | AMBUS EASYSWITCH |
| circuit breaker | -F4 | 7.8742.01160<br>3RV2021-1FA10 (3.5-5 A)<br>setting: 3.5 A | 7.8742.01160<br>3RV2021-1FA10 (3.5-5 A)<br>setting: 3.5 A | 7.8742.01160<br>3RV2021-1FA10 (3.5-5 A)<br>setting: 3.5 A | 7.8742.01160<br>3RV2021-1FA10 (3.5-5 A)<br>setting: 3.5 A |
| | | NEC 430.32(C) incremental<br>setting: 3.9 A | NEC 430.32(C) incremental<br>setting: 3.9 A | NEC 430.32(C) incremental<br>setting: 3.9 A | NEC 430.32(C) incremental<br>setting: 3.9 A |
| terminal block | | 7.3140.05090<br>3RV2928-1H | 7.3140.05090<br>3RV2928-1H | 7.3140.05090<br>3RV2928-1H | 7.3140.05090<br>3RV2928-1H |
| auxiliary switch | | 7.8742.05000 | 7.8742.05000 | 7.8742.05000 | 7.8742.05000 |
| | **Siemens** | 3RV2901-1E | 3RV2901-1E | 3RV2901-1E | 3RV2901-1E |
| transformer | -T11 | 7.2239.20080<br>USTE250 (250 VA) | 7.2239.20080<br>USTE250 (250 VA) | 7.2239.20080<br>USTE250 (250 VA) | 7.2239.20080<br>USTE250 (250 VA) |
| | **Block** | diagram 2, Sht. 15 | diagram 2, Sht. 15 | diagram 2, Sht. 15 | diagram 2, Sht. 15 |
| power supply | -T21/-T22 | 7.7605P0 | 7.7605P0 | 7.7605P0 | 7.7605P0 |
| | **Prodrive** | PSDC24/2.5 | PSDC24/2.5 | PSDC24/2.5 | PSDC24/2.5 |
| connection | -W13 | 7.3140.05270<br>3RA2933-3FA00 | 7.3140.05370<br>3RA2943-3FA00 | 7.3140.05270<br>3RA2933-3FA00 | 7.3140.05370<br>3RA2943-3FA00 |
| connection | -W14 | 7.3140.05270<br>3RA2933-3FA00 | 6 AWG black<br>600 V, 90°C | 7.3140.05270<br>3RA2933-3FA00 | 6 AWG black<br>600 V, 90°C |
| cables | -W19.1/.2 | 8 AWG<br>600 V, 90°C | 6 AWG<br>600 V, 90°C | 4 AWG<br>600 V, 90°C | 2 AWG<br>600 V, 90°C |
| controller ventilator | -M7 | 7.3146.00660 / LV300 | 7.3146.00660 / LV300 | 7.3146.00660 / LV300 | 7.3146.00660 / LV300 |
| outlet filter | **Rübsamen&Herr** | 7.2752.00010 / GV300 | 7.2752.00010 / GV300 | 7.2752.00010 / GV300 | 7.2752.00010 / GV300 |

page 5 / 8 Sht.

UKK-U3010.07

SC2 MCS

electrical component parts list

booster compressor

KAESER KOMPRESSOREN

| | Date | Name |
|---|---|---|
| Drawn | 22.01.21 | Sitter |
| Released | | Büchner |
| Date | | |
| C Change | | |

electrical component parts list

| model | | DN 22 C | DN 30 C | DN37C / DN37CXL | DN 45 C |
|---|---|---|---|---|---|
| machine power supply | | 460 V ±10 %, 60 Hz | 460 V ±10 %, 60 Hz | 460 V ±10 %, 60 Hz | 460 V ±10 %, 60 Hz |
| motor | -M1 | 30 hp | 40 hp | 50 hp | 60 hp |
| motor | -M4 | 2 hp | 2 hp | 2 hp | 2 hp |
| lay-out | | page 1 | page 1 | page 1 | page 1 |
| supply terminals | -X0:U1/V1/W1 | 7.3140.05070 | 7.3140.05070 | 7.3140.05070 | 7.3140.05070 |
| | | 3RV2935-5E (Siemens) | 3RV2935-5E (Siemens) | 3RV2935-5E (Siemens) | 3RV2935-5E (Siemens) |
| | Torque | 53 lb-in | 53 lb-in | 53 lb-in | 53 lb-in |
| | Stripped length | 25 mm | 25 mm | 25 mm | 25 mm |
| | GRD rail | 7.8952.0 | 7.8952.0 | 7.8952.0 | 7.8952.0 |
| | IHI | S2/0-34-44 | S2/0-34-44 | S2/0-34-44 | S2/0-34-44 |
| | Torque | fig. 20, Sht. 19 | fig. 20, Sht. 19 | fig. 20, Sht. 19 | fig. 20, Sht. 19 |
| | Stripped length | minimal 16 mm | minimal 16 mm | minimal 16 mm | minimal 16 mm |
| supply | connection | fig. 10+ 11, Sht. 17 | fig. 10+ 11, Sht. 17 | fig. 10+ 11, Sht. 17 | fig. 10+ 11, Sht. 17 |
| terminal strip | -X11 | 7.7113.00101 Wieland | 7.7113.00101 Wieland | 7.7113.00101 Wieland | 7.7113.00101 Wieland |
| | Handling | fig. 1, Sht. 16 | fig. 1, Sht. 16 | fig. 1, Sht. 16 | fig. 1, Sht. 16 |
| contactor | -Q1/-Q2 | 7.8740.00410 | 7.8740.00420 | 7.8740.00410 | 7.8740.00420 |
| | | 3RT2036-1AK60 | 3RT2037-1AK60 | 3RT2036-1AK60 | 3RT2037-1AK60 |
| interference suppressor | | 7.8740.05150 | 7.8740.05150 | 7.8740.05150 | 7.8740.05150 |
| | Siemens | 3RT2936-1CC00 | 3RT2936-1CC00 | 3RT2936-1CC00 | 3RT2936-1CC00 |
| auxiliary switch | -Q1 | 7.8740.05010 | 7.8740.05010 | 7.8740.05010 | 7.8740.05010 |
| | Siemens | 3RH2911-1HA11 | 3RH2911-1HA11 | 3RH2911-1HA11 | 3RH2911-1HA11 |
| contactor | -Q3 | 7.8740.00400 | 7.8740.00400 | 7.8740.00400 | 7.8740.00400 |
| | | 3RT2035-1AK60 | 3RT2035-1AK60 | 3RT2035-1AK60 | 3RT2035-1AK60 |
| interference suppressor | | 7.8740.05150 | 7.8740.05150 | 7.8740.05150 | 7.8740.05150 |
| | Siemens | 3RT2936-1CC00 | 3RT2936-1CC00 | 3RT2936-1CC00 | 3RT2936-1CC00 |
| contactor | -Q4 | 7.8740.00340 | 7.8740.00340 | 7.8740.00340 | 7.8740.00340 |
| | | 3RT2023-1AK60 | 3RT2023-1AK60 | 3RT2023-1AK60 | 3RT2023-1AK60 |
| interference suppressor | | 7.8740.05140 | 7.8740.05140 | 7.8740.05140 | 7.8740.05140 |
| | Siemens | 3RT2926-1CC00 | 3RT2926-1CC00 | 3RT2926-1CC00 | 3RT2926-1CC00 |
| coupling relay | -K50 | 7.3149.01670 | 7.3149.01670 | 7.3149.01670 | 7.3149.01670 |
| | Wieland | flare 110 V-1W-250 V6 A-F | flare 110 V-1W-250 V6 A-F | flare 110 V-1W-250 V6 A-F | flare 110 V-1W-250 V6 A-F |
| overload relay | -B25 | 7.8741.00090 | 7.8741.00100 | 7.8741.00090 | 7.8741.00100 |
| | Siemens | 3RB3036-1UB0 (12-50 A) | 3RB3036-1WB0 (20-80 A) | 3RB3036-1UB0 (12-50 A) | 3RB3036-1WB0 (20-80 A) |
| | | setting: 21 A | | setting: 33 A | setting: 41 A |
| motor -M1 | 7.9991.1 | | setting: 28 A | | |
| motor -M1 | 7.9991.00100 | | setting: 37 A | | |
| | | NEC 430.32(C) incremental | NEC 430.32(C) incremental | NEC 430.32(C) incremental | NEC 430.32(C) incremental |
| | | setting: 24 A | | setting: 37 A | setting: 45 A |
| motor -M1 | 7.9991.1 | | setting: 31 A | | |
| motor -M1 | 7.9991.00100 | | setting: 41 A | | |
| fuses | -1FU/-2FU | 7.3313.1 | 7.3313.1 | 7.3313.1 | 7.3313.1 |
| | Ferraz | ATQR 2 1/2 (2.5 A, 600 V) | ATQR 2 1/2 (2.5 A, 600 V) | ATQR 2 1/2 (2.5 A, 600 V) | ATQR 2 1/2 (2.5 A, 600 V) |
| fuses | -3FU | 7.3313.1 | 7.3313.1 | 7.3313.1 | 7.3313.1 |
| | Ferraz | ATQR 2 1/2 (2.5 A, 600 V) | ATQR 2 1/2 (2.5 A, 600 V) | ATQR 2 1/2 (2.5 A, 600 V) | ATQR 2 1/2 (2.5 A, 600 V) |
| fuse socket | -1FU...-3FU | 7.3320.00060 | 7.3320.00060 | 7.3320.00060 | 7.3320.00060 |
| | Wöhner | AMBUS EASYSWITCH | AMBUS EASYSWITCH | AMBUS EASYSWITCH | AMBUS EASYSWITCH |
| circuit breaker | -F4 | 7.8742.01150 | 7.8742.01150 | 7.8742.01150 | 7.8742.01150 |
| | | 3RV2021-1EA10 (2.8-4 A) | 3RV2021-1EA10 (2.8-4 A) | 3RV2021-1EA10 (2.8-4 A) | 3RV2021-1EA10 (2.8-4 A) |
| | | setting: 2.9 A | setting: 2.9 A | setting: 2.9 A | setting: 2.9 A |
| | | NEC 430.32(C) incremental | NEC 430.32(C) incremental | NEC 430.32(C) incremental | NEC 430.32(C) incremental |
| | | setting: 3.2 A | setting: 3.2 A | setting: 3.2 A | setting: 3.2 A |
| terminal block | | 7.3140.05090 | 7.3140.05090 | 7.3140.05090 | 7.3140.05090 |
| | | 3RV2928-1H | 3RV2928-1H | 3RV2928-1H | 3RV2928-1H |
| auxiliary switch | | 7.8742.05000 | 7.8742.05000 | 7.8742.05000 | 7.8742.05000 |
| | Siemens | 3RV2901-1E | 3RV2901-1E | 3RV2901-1E | 3RV2901-1E |
| transformer | -T11 | 7.7569.0 | 7.7569.0 | 7.7569.0 | 7.7569.0 |
| | | B0601024 (250 VA) | B0601024 (250 VA) | B0601024 (250 VA) | B0601024 (250 VA) |
| | Block | diagram 1, Sht. 15 | diagram 1, Sht. 15 | diagram 1, Sht. 15 | diagram 1, Sht. 15 |
| power supply | -T21/-T22 | 7.7605P0 | 7.7605P0 | 7.7605P0 | 7.7605P0 |
| | Prodrive | PSDC24/2.5 | PSDC24/2.5 | PSDC24/2.5 | PSDC24/2.5 |
| connection | -W13 | 7.3140.05270 | 7.3140.05270 | 7.3140.05270 | 7.3140.05270 |
| | | 3RA2933-3FA00 | 3RA2933-3FA00 | 3RA2933-3FA00 | 3RA2933-3FA00 |
| connection | -W14 | 7.3140.05270 | 7.3140.05270 | 7.3140.05270 | 7.3140.05270 |
| | | 3RA2933-3FA00 | 3RA2933-3FA00 | 3RA2933-3FA00 | 3RA2933-3FA00 |
| cables | -W19.1/.2 | 10 AWG | 6 AWG | 6 AWG | 4 AWG |
| | | 600 V, 90°C | 600 V, 90°C | 600 V, 90°C | 600 V, 90°C |
| controller ventilator | -M7 | 7.3146.00660 / LV300 | 7.3146.00660 / LV300 | 7.3146.00660 / LV300 | 7.3146.00660 / LV300 |
| outlet filter | Rübsamen&Herr | 7.2752.00010 / GV300 | 7.2752.00010 / GV300 | 7.2752.00010 / GV300 | 7.2752.00010 / GV300 |

page 6 8 Sht.

UKK-U3010.07

SC2 MCS

electrical component parts list
booster compressor

KAESER KOMPRESSOREN

| | | |
|---|---|---|
| Date | 22.01.21 | |
| Drawn | Silter | |
| Released | Büchner | |
| Name | | |
| Date | | |

| C | Change | a | b | c |
|---|---|---|---|---|

electrical component parts list

| model | | DN 22 C | DN 30 C | DN37C / DN37CXL | DN 45 C |
|---|---|---|---|---|---|
| machine power supply | | 575 V ±10 %, 60 Hz | 575 V ±10 %, 60 Hz | 575 V ±10 %, 60 Hz | 575 V ±10 %, 60 Hz |
| motor | -M1 | 30 hp | 40 hp | 50 hp | 60 hp |
| motor | -M4 | 2 hp | 2 hp | 2 hp | 2 hp |
| lay-out | | page 1 | page 1 | page 1 | page 1 |
| supply terminals | -X0:U1/V1/W1 | 7.3140.05070 | 7.3140.05070 | 7.3140.05070 | 7.3140.05070 |
| | | 3RV2935-5E (Siemens) | 3RV2935-5E (Siemens) | 3RV2935-5E (Siemens) | 3RV2935-5E (Siemens) |
| | Torque | 53 lb-in | 53 lb-in | 53 lb-in | 53 lb-in |
| | Stripped length | 25 mm | 25 mm | 25 mm | 25 mm |
| | GRD rail | 7.8952.0 | 7.8952.0 | 7.8952.0 | 7.8952.0 |
| | IHI | S2/0-34-44 | S2/0-34-44 | S2/0-34-44 | S2/0-34-44 |
| | Torque | fig. 20, Sht. 19 | fig. 20, Sht. 19 | fig. 20, Sht. 19 | fig. 20, Sht. 19 |
| | Stripped length | minimal 16 mm | minimal 16 mm | minimal 16 mm | minimal 16 mm |
| supply | connection | fig. 10+ 11, Sht. 17 | fig. 10+ 11, Sht. 17 | fig. 10+ 11, Sht. 17 | fig. 10+ 11, Sht. 17 |
| terminal strip | -X11 | 7.7113.00101 Wieland | 7.7113.00101 Wieland | 7.7113.00101 Wieland | 7.7113.00101 Wieland |
| | Handling | fig. 1, Sht. 16 | fig. 1, Sht. 16 | fig. 1, Sht. 16 | fig. 1, Sht. 16 |
| contactor | -Q1/-Q2 | 7.8740.00410 | 7.8740.00410 | 7.8740.00410 | 7.8740.00410 |
| | | 3RT2036-1AK60 | 3RT2036-1AK60 | 3RT2036-1AK60 | 3RT2036-1AK60 |
| interference suppressor | | 7.8740.05150 | 7.8740.05150 | 7.8740.05150 | 7.8740.05150 |
| | Siemens | 3RT2936-1CC00 | 3RT2936-1CC00 | 3RT2936-1CC00 | 3RT2936-1CC00 |
| auxiliary switch | -Q1 | 7.8740.05010 | 7.8740.05010 | 7.8740.05010 | 7.8740.05010 |
| | Siemens | 3RH2911-1HA11 | 3RH2911-1HA11 | 3RH2911-1HA11 | 3RH2911-1HA11 |
| contactor | -Q3 | 7.8740.00400 | 7.8740.00400 | 7.8740.00400 | 7.8740.00400 |
| | | 3RT2035-1AK60 | 3RT2035-1AK60 | 3RT2035-1AK60 | 3RT2035-1AK60 |
| interference suppressor | | 7.8740.05150 | 7.8740.05150 | 7.8740.05150 | 7.8740.05150 |
| | Siemens | 3RT2936-1CC00 | 3RT2936-1CC00 | 3RT2936-1CC00 | 3RT2936-1CC00 |
| contactor | -Q4 | 7.8740.00340 | 7.8740.00340 | 7.8740.00340 | 7.8740.00340 |
| | | 3RT2023-1AK60 | 3RT2023-1AK60 | 3RT2023-1AK60 | 3RT2023-1AK60 |
| interference suppressor | | 7.8740.05140 | 7.8740.05140 | 7.8740.05140 | 7.8740.05140 |
| | Siemens | 3RT2926-1CC00 | 3RT2926-1CC00 | 3RT2926-1CC00 | 3RT2926-1CC00 |
| coupling relay | -K50 | 7.3149.01670 | 7.3149.01670 | 7.3149.01670 | 7.3149.01670 |
| | Wieland | flare 110 V-1W-250 V6 A-F | flare 110 V-1W-250 V6 A-F | flare 110 V-1W-250 V6 A-F | flare 110 V-1W-250 V6 A-F |
| overload relay | -B25 | 7.8741.00090 | 7.8741.00090 | 7.8741.00090 | 7.8741.00090 |
| | Siemens | 3RB3036-1UB0 (12-50 A) | 3RB3036-1UB0 (12-50 A) | 3RB3036-1UB0 (12-50 A) | 3RB3036-1UB0 (12-50 A) |
| | | setting: 16 A | | setting: 26 A | setting: 32 A |
| motor -M1 | 7.9991.10030 | | setting: 22 A | | |
| motor -M1 | 7.9991.00130 | | setting: 29 A | | |
| | | NEC 430.32(C) incremental | NEC 430.32(C) incremental | NEC 430.32(C) incremental | NEC 430.32(C) incremental |
| | | setting: 18 A | | setting: 30 A | setting: 36 A |
| motor -M1 | 7.9991.10030 | | setting: 25 A | | |
| motor -M1 | 7.9991.00130 | | setting: 32 A | | |
| fuses | -1FU/-2FU | 7.3316.1 | 7.3316.1 | 7.3316.1 | 7.3316.1 |
| | Ferraz | ATQR 1 1/2 (1.5 A, 600 V) | ATQR 1 1/2 (1.5 A, 600 V) | ATQR 1 1/2 (1.5 A, 600 V) | ATQR 1 1/2 (1.5 A, 600 V) |
| fuses | -3FU | 7.3313.1 | 7.3313.1 | 7.3313.1 | 7.3313.1 |
| | Ferraz | ATQR 2 1/2 (2.5 A, 600 V) | ATQR 2 1/2 (2.5 A, 600 V) | ATQR 2 1/2 (2.5 A, 600 V) | ATQR 2 1/2 (2.5 A, 600 V) |
| fuse socket | -1FU...-3FU | 7.3320.00060 | 7.3320.00060 | 7.3320.00060 | 7.3320.00060 |
| | Wöhner | AMBUS EASYSWITCH | AMBUS EASYSWITCH | AMBUS EASYSWITCH | AMBUS EASYSWITCH |
| circuit breaker | -F4 | 7.8742.01140 | 7.8742.01140 | 7.8742.01140 | 7.8742.01140 |
| | | 3RV2021-1DA10 (2.2-3.2 A) | 3RV2021-1DA10 (2.2-3.2 A) | 3RV2021-1DA10 (2.2-3.2 A) | 3RV2021-1DA10 (2.2-3.2 A) |
| | | setting: 2.3 A | setting: 2.3 A | setting: 2.3 A | setting: 2.3 A |
| | | NEC 430.32(C) incremental | NEC 430.32(C) incremental | NEC 430.32(C) incremental | NEC 430.32(C) incremental |
| | | setting: 2.6 A | setting: 2.6 A | setting: 2.6 A | setting: 2.6 A |
| terminal block | | 7.3140.05090 | 7.3140.05090 | 7.3140.05090 | 7.3140.05090 |
| | | 3RV2928-1H | 3RV2928-1H | 3RV2928-1H | 3RV2928-1H |
| auxiliary switch | | 7.8742.05000 | 7.8742.05000 | 7.8742.05000 | 7.8742.05000 |
| | Siemens | 3RV2901-1E | 3RV2901-1E | 3RV2901-1E | 3RV2901-1E |
| transformer | -T11 | 7.2239.20080 | 7.2239.20080 | 7.2239.20080 | 7.2239.20080 |
| | | USTE250 (250 VA) | USTE250 (250 VA) | USTE250 (250 VA) | USTE250 (250 VA) |
| | Block | diagram 2, Sht. 15 | diagram 2, Sht. 15 | diagram 2, Sht. 15 | diagram 2, Sht. 15 |
| power supply | -T21/-T22 | 7.7605P0 | 7.7605P0 | 7.7605P0 | 7.7605P0 |
| | Prodrive | PSDC24/2.5 | PSDC24/2.5 | PSDC24/2.5 | PSDC24/2.5 |
| connection | -W13 | 7.3140.05270 | 7.3140.05270 | 7.3140.05270 | 7.3140.05270 |
| | | 3RA2933-3FA00 | 3RA2933-3FA00 | 3RA2933-3FA00 | 3RA2933-3FA00 |
| connection | -W14 | 7.3140.05270 | 7.3140.05270 | 7.3140.05270 | 7.3140.05270 |
| | | 3RA2933-3FA00 | 3RA2933-3FA00 | 3RA2933-3FA00 | 3RA2933-3FA00 |
| cables | -W19.1/.2 | 10 AWG | 6 AWG | 6 AWG | 6 AWG |
| | | 600 V, 90°C | 600 V, 90°C | 600 V, 90°C | 600 V, 90°C |
| controller ventilator | -M7 | 7.3146.00660 / LV300 | 7.3146.00660 / LV300 | 7.3146.00660 / LV300 | 7.3146.00660 / LV300 |
| outlet filter | Rübsamen&Herr | 7.2752.00010 / GV300 | 7.2752.00010 / GV300 | 7.2752.00010 / GV300 | 7.2752.00010 / GV300 |

page 7 / 8 Sht.

UKK-U3010.07

SC2 MCS

electrical component parts list

booster compressor

KAESER KOMPRESSOREN

| | Date | Name |
|---|---|---|
| c | 22.01.21 | |
| b | Sitter | |
| a | Büchner | |
| C Change | Date | Name |

| model | electrical component parts list<br>Common parts DNC |
|---|---|
| machine power supply | **208 V ±10 %, 60 Hz**<br>**230 V ±10 %, 60 Hz**<br>**380 V ±10 %, 60 Hz**<br>**460 V ±10 %, 60 Hz**<br>**575 V ±10 %, 60 Hz** |
| compressor control **-K20**<br>**Prodrive** | 7.7601.0<br>SIGMA CONTROL 2 MCS |
| IO-module **-K21**<br>**Prodrive** | 7.7604.1<br>SIGMA CONTROL 2 IOM-3 |
| IO-module **-K22**<br>option C40 **Prodrive** | 7.7602.1<br>SIGMA CONTROL 2 IOM-1 |
| EMERGENCY STOP pushbutton **-S1** | 7.3217.0<br>QRUV |
| auxiliary contact<br>**Schlegel** | 7.3218.0<br>MTHOO |

= +
page 8
8 Sht.
UKK-U3010.07
SC2 MCS
electrical component parts list
booster compressor
KAESER KOMPRESSOREN

| C | Change | Date | Name |
|---|---|---|---|
| a | | | |
| b | | | |
| c | | | |

Date 22.01.21
Drawn Sitter
Released Büchner

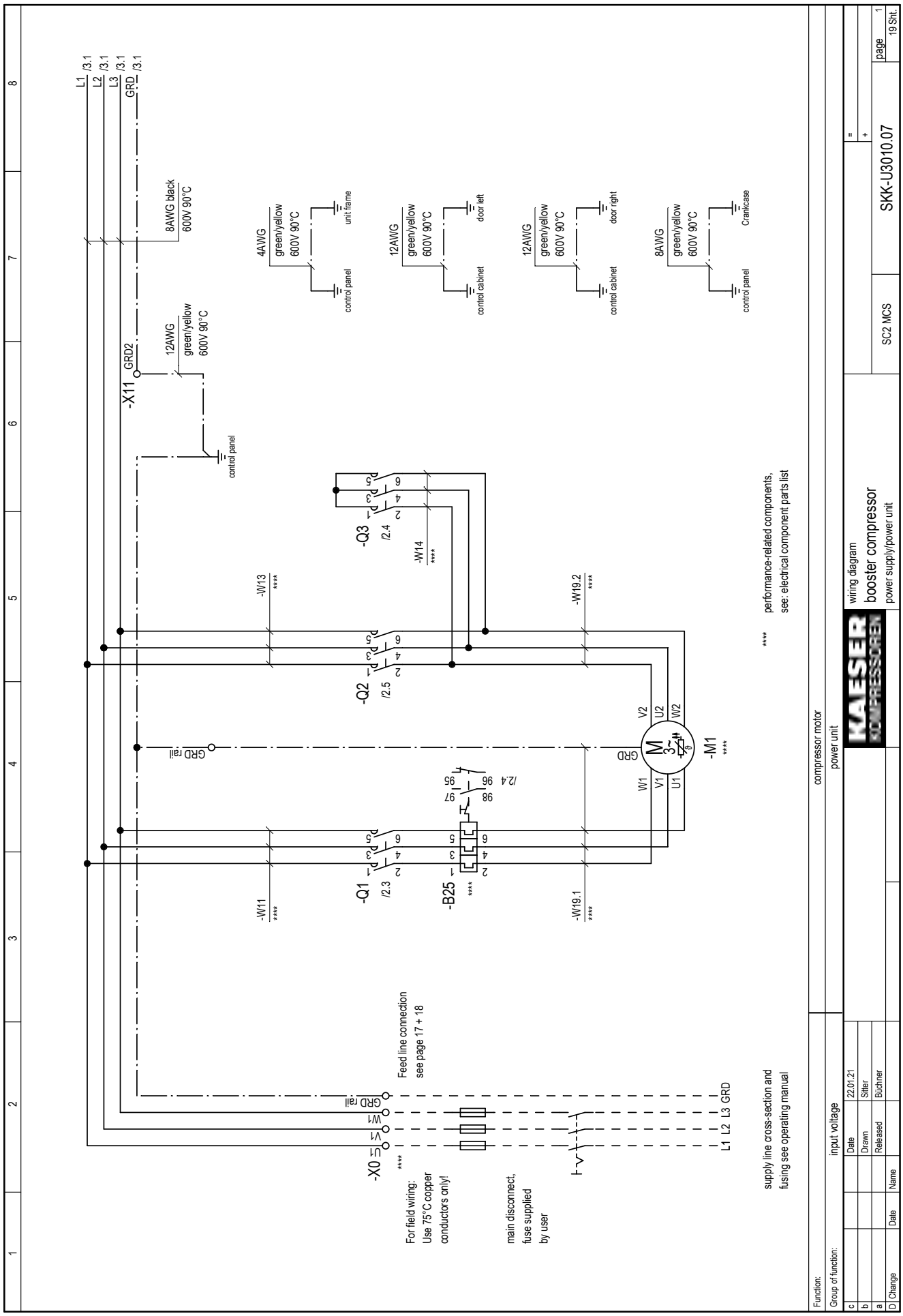
L1 /3.1
L2 /3.1
L3 /3.1
GRD /3.1
8AWG black
600V 90°C
4AWG
green/yellow
600V 90°C
unit frame
control panel
12AWG
green/yellow
600V 90°C
door left
control cabinet
12AWG
green/yellow
600V 90°C
door right
control cabinet
8AWG
green/yellow
600V 90°C
Crankcase
control panel
-X11
GRD2
12AWG
green/yellow
600V 90°C
control panel
-Q3
/2.4
-W14
****
-W13
****
-W19.2
****
-Q2
/2.5
performance-related components,
see: electrical component parts list
****
GRD rail
-M1
***
V2
U2
W2
GRD
W1
V1
U1
/2.4
96
95
98
97
-Q1
/2.3
-B25
****
-W11
****
-W19.1
****
Feed line connection
see page 17 + 18
GRD rail
W1
V1
U1
-X0
***
L1 L2 L3 GRD
For field wiring:
Use 75°C copper
conductors only!
main disconnect,
fuse supplied
by user
supply line cross-section and
fusing see operating manual
compressor motor
power unit
input voltage
Function:
Group of function:
c
b
a
D Change
Date
Name
Date
22.01.21
Drawn
Sitter
Released
Büchner
wiring diagram
booster compressor
power supply/power unit
KAESER KOMPRESSOREN
SC2 MCS
SKK-U3010.07
page
1
19 Sht.

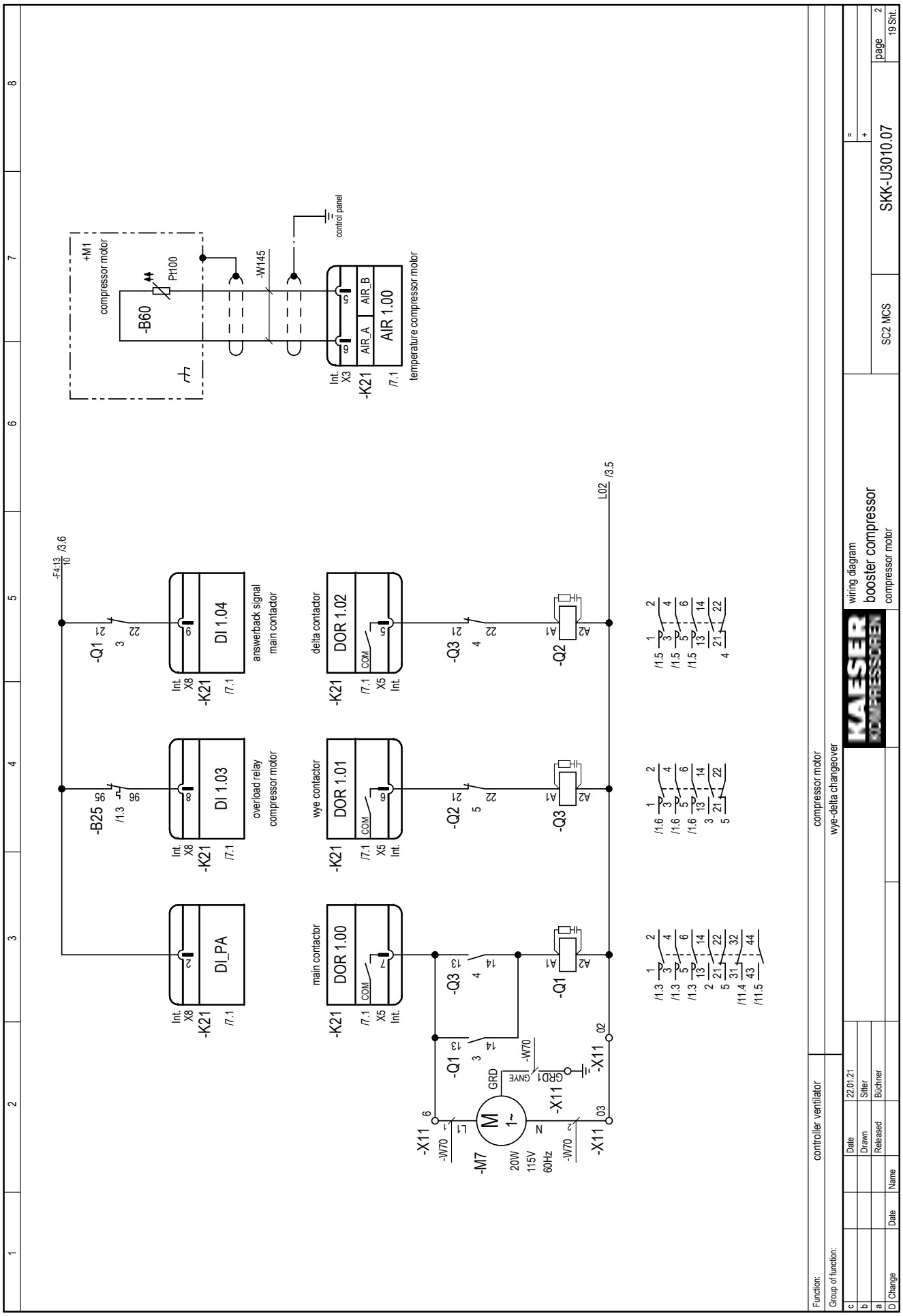
+M1
compressor motor
-B60
Pt100
-W145
control panel
AIR_A
AIR_B
AIR 1.00
temperature compressor motor
-K21
Int.
X3
/7.1
-F4:13
10
/3.6
-Q1
-B25
/1.3
DI_PA
DI 1.03
DI 1.04
overload relay
compressor motor
answerback signal
main contactor
delta contactor
wye contactor
main contactor
DOR 1.00
DOR 1.01
DOR 1.02
COM
X5
Int.
X8
-Q2
-Q3
L02
/3.5
-M7
20W
115V
60Hz
GRD
GNYE
GRD1
-X11
-W70
L1
N
M
1~
Function:
controller ventilator
Group of function:
compressor motor
wye-delta changeover
Date
22.01.21
Drawn
Silter
Released
Büchner
Name
Change
wiring diagram
booster compressor
compressor motor
SC2 MCS
SKK-U3010.07
page
2
19 Sht.

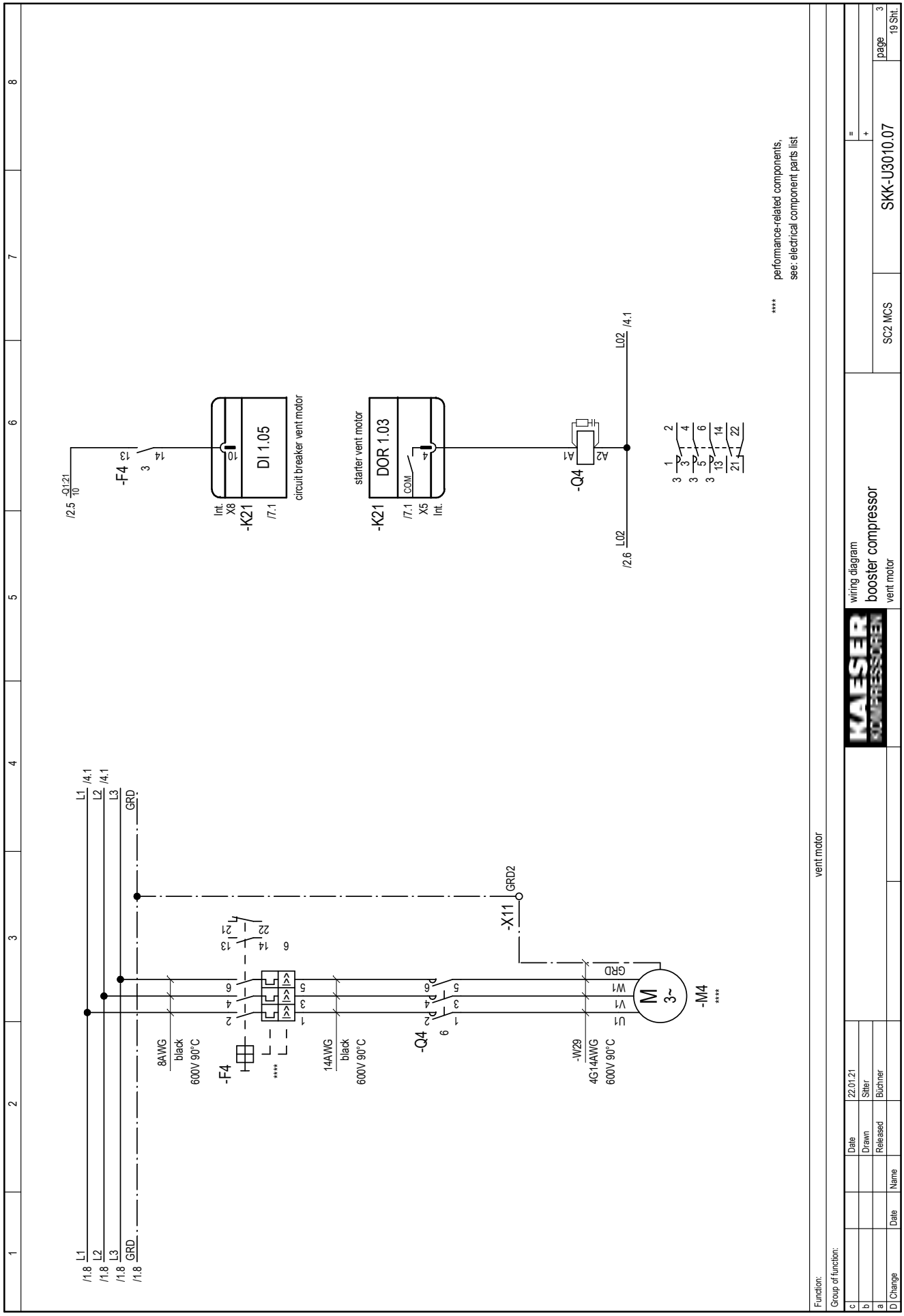
/2.5 -Q121 10
-F4
13
14
3
Int. X8
-K21
/7.1
10
DI 1.05
circuit breaker vent motor
starter vent motor
-K21
/7.1
X5 Int.
COM
DOR 1.03
4
-Q4
A1
A2
L02 /4.1
/2.6 L02
****
performance-related components,
see: electrical component parts list
L1 /4.1
L2 /4.1
L3
GRD
/1.8 L1
/1.8 L2
/1.8 L3
/1.8 GRD
8AWG
black
600V 90°C
-F4
****
14AWG
black
600V 90°C
-Q4
-X11
GRD2
-W29
4G14AWG
600V 90°C
U1
V1
W1
GRD
M
3~
-M4
****
vent motor
Function:
Group of function:
c
b
a
D Change
Date
Name
Date
Drawn
Released
22.01.21
Sitter
Büchner
KAESER KOMPRESSOREN
wiring diagram
booster compressor
vent motor
SC2 MCS
SKK-U3010.07
=
+
page 3
19 Sht.

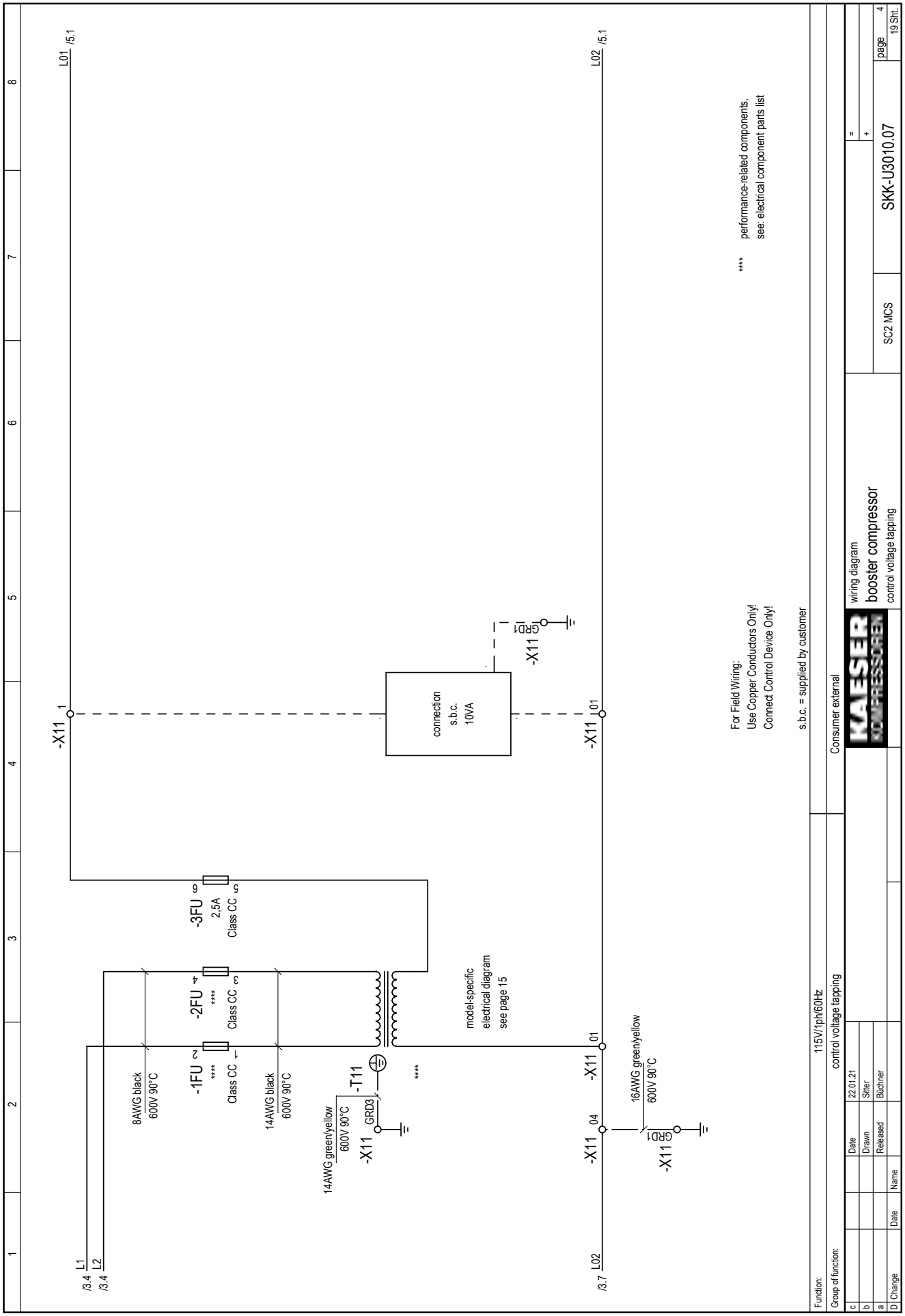
L01 /5.1
L02 /5.1
-X11 1
-X11 01
connection
s.b.c.
10VA
GRD1
-X11
-3FU 6 5
2,5A
Class CC
-2FU 4 3
Class CC
-1FU 2 1
Class CC
8AWG black
600V 90°C
14AWG black
600V 90°C
14AWG green/yellow
600V 90°C
-T11
GRD3
-X11
model-specific
electrical diagram
see page 15
-X11 01
-X11 04
16AWG green/yellow
600V 90°C
GRD1
-X11
L1 /3.4
L2 /3.4
L02 /3.7
For Field Wiring:
Use Copper Conductors Only!
Connect Control Device Only!
s.b.c. = supplied by customer
**** performance-related components,
see: electrical component parts list
Consumer external
115V/1ph/60Hz
control voltage tapping
Function:
Group of function:
Date 22.01.21
Drawn Sitter
Released Büchner
Name
Date
D Change
wiring diagram
booster compressor
control voltage tapping
SC2 MCS
SKK-U3010.07
page 4
19 Sht.

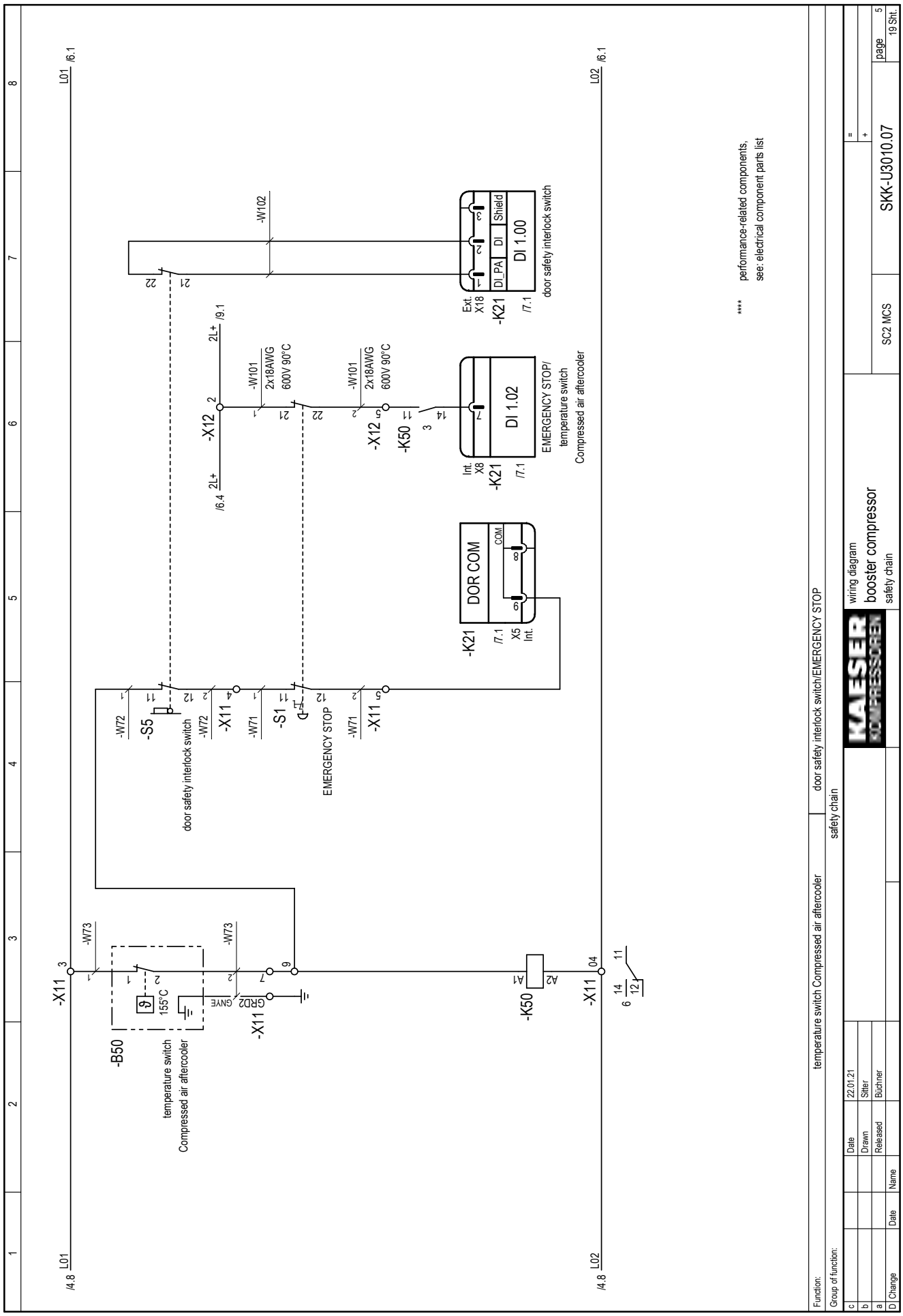
L01
/6.1
L02
/4.8
-X11
-W73
-B50
temperature switch
Compressed air aftercooler
155°C
GRD2
GNYE
-X11
-K50
A1
A2
-S5
door safety interlock switch
-W72
-X11
-W71
-S1
EMERGENCY STOP
-X11
-X12
2L+
/9.1
/6.4
-W101
2x18AWG
600V 90°C
-K21
DOR COM
COM
/7.1
X5
Int.
DI 1.02
EMERGENCY STOP/
temperature switch
Compressed air aftercooler
Int.
X8
-W102
DI 1.00
door safety interlock switch
Ext.
X18
DI_PA
DI
Shield
**** performance-related components,
see: electrical component parts list
Function:
temperature switch Compressed air aftercooler
door safety interlock switch/EMERGENCY STOP
Group of function:
safety chain
Date
Name
Drawn
Released
22.01.21
Sitter
Büchner
Change
wiring diagram
booster compressor
safety chain
SC2 MCS
SKK-U3010.07
page 5
19 Sht.

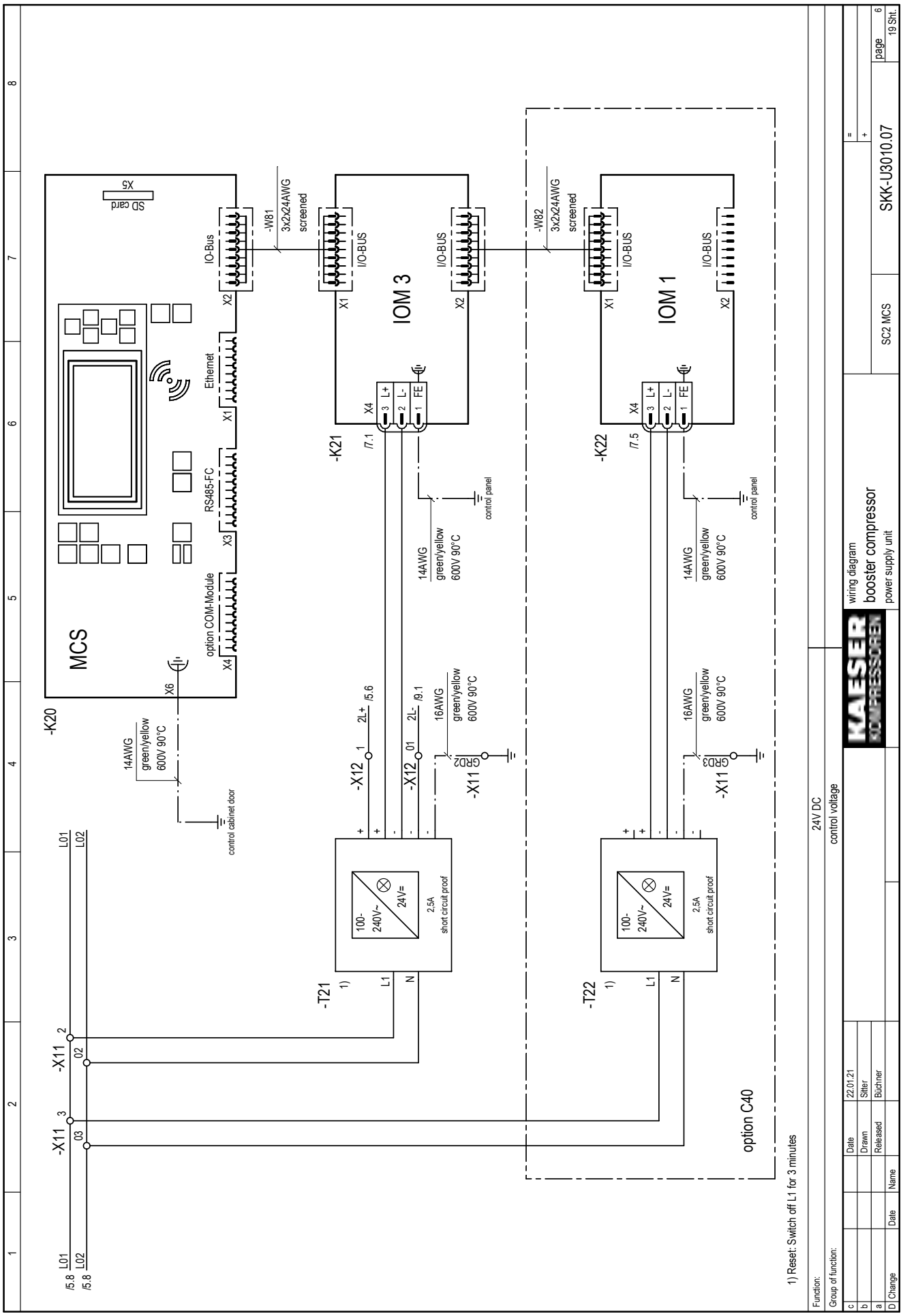
MCS
-K20
SD card
X5
IO-Bus
X2
Ethernet
X1
RS485-FC
X3
option COM-Module
X4
X6
-W81
3x2x24AWG
screened
I/O-BUS
IOM 3
-K21
/7.1
-W82
IOM 1
-K22
/7.5
14AWG
green/yellow
600V 90°C
control panel
control cabinet door
16AWG
-X12
2L+ /5.6
2L- /9.1
-X11
GRD2
GRD3
-T21
-T22
100-240V~
24V=
2,5A
short circuit proof
L1
N
L01
L02
/5.8
-X11
02
03
option C40
1) Reset: Switch off L1 for 3 minutes
24V DC
control voltage
Function:
Group of function:
Date
Drawn
Released
22.01.21
Sitter
Büchner
Name
D Change
wiring diagram
booster compressor
power supply unit
SC2 MCS
SKK-U3010.07
page 6
19 Sht.

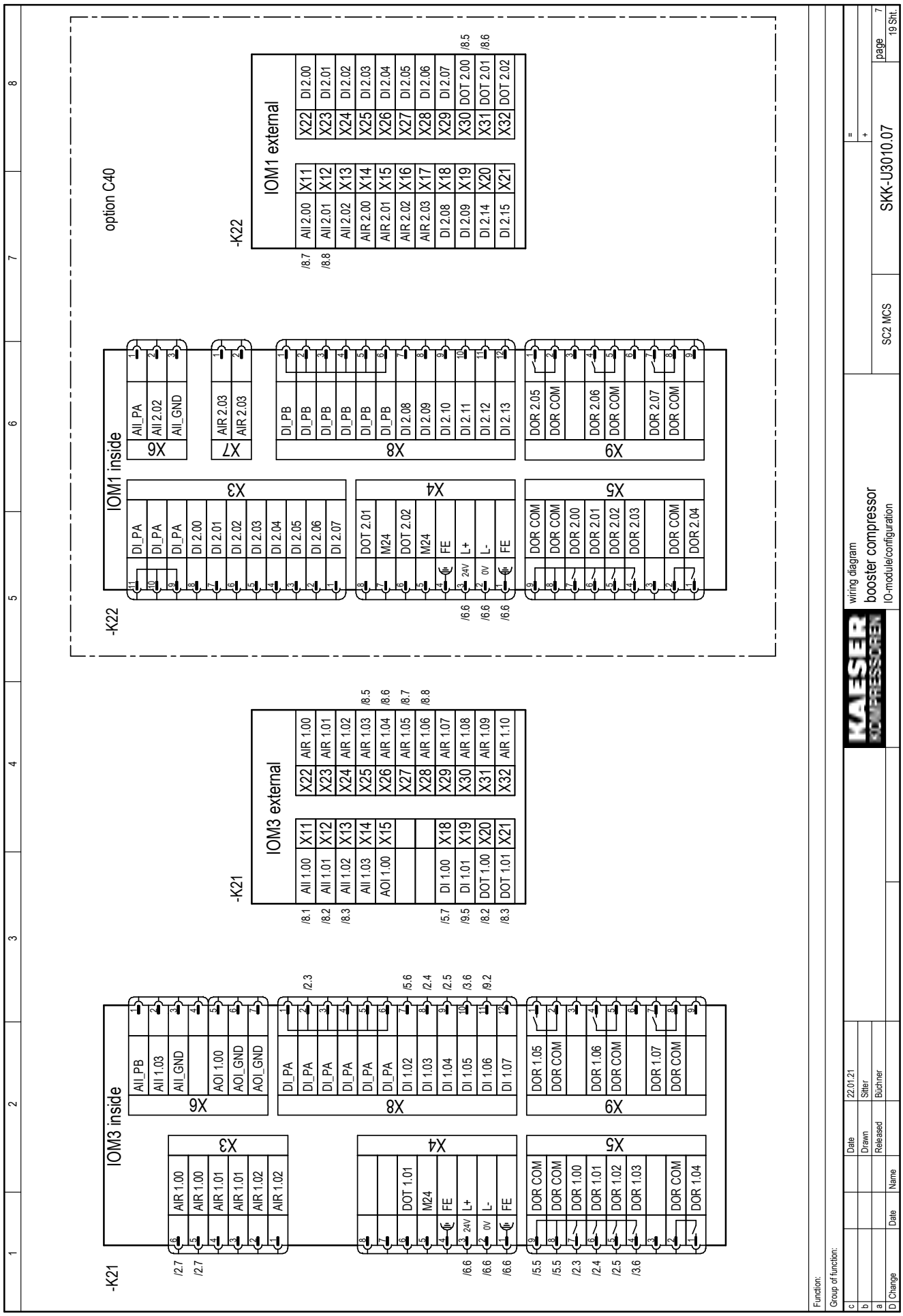
option C40
-K22
IOM1 inside
IOM1 external
-K21
IOM3 inside
IOM3 external
wiring diagram
booster compressor
IO-module/configuration
SC2 MCS
SKK-U3010.07
page 7
19 Sht.
Function:
Group of function:
Date 22.01.21
Drawn Sitter
Released Büchner
Name
Date
Change

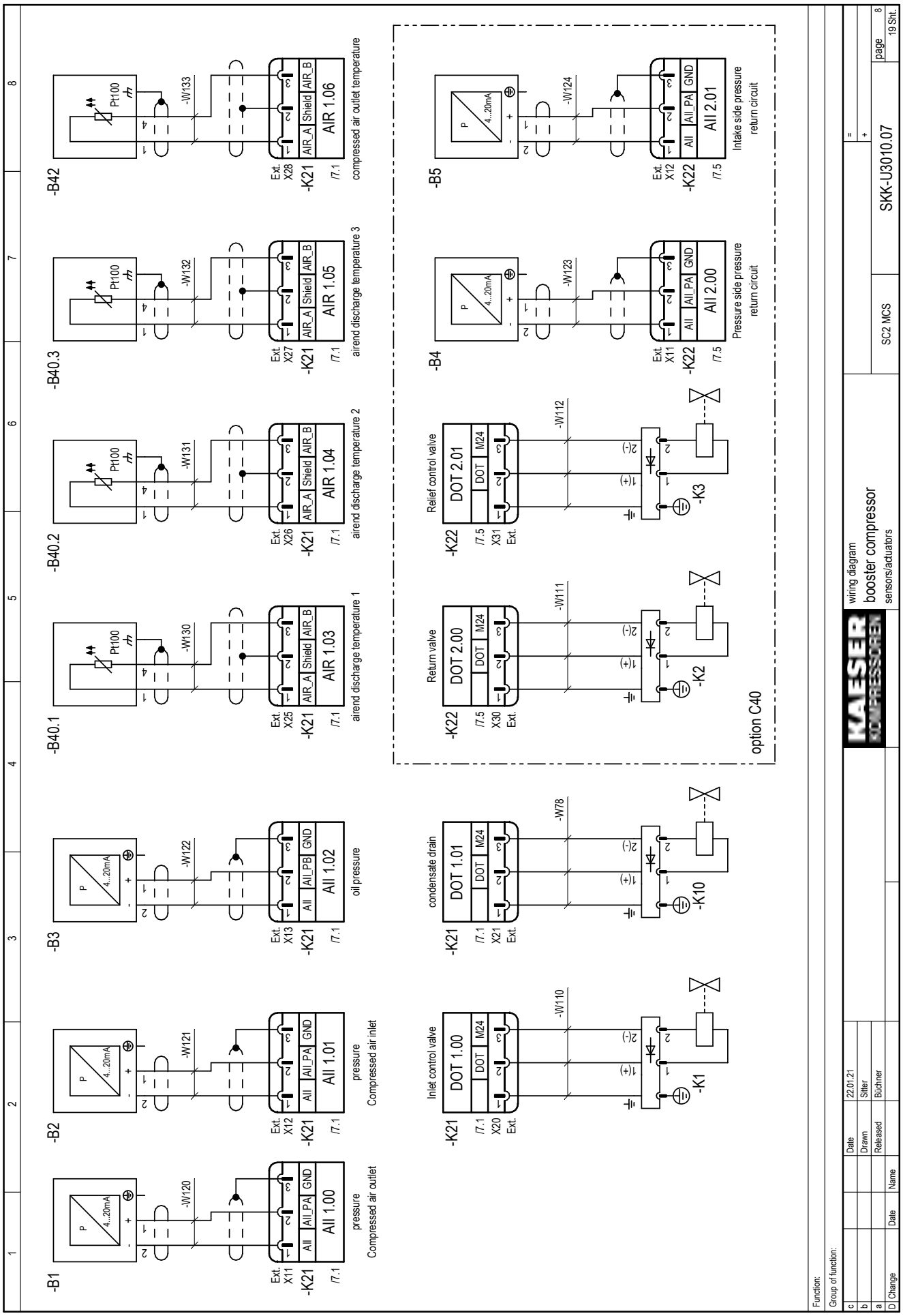
-B1
-B2
-B3
-B40.1
-B40.2
-B40.3
-B42
-B4
-B5
-W120
-W121
-W122
-W130
-W131
-W132
-W133
-W123
-W124
4...20mA
Pt100
All 1.00
All 1.01
All 1.02
AIR 1.03
AIR 1.04
AIR 1.05
AIR 1.06
All 2.00
All 2.01
pressure
Compressed air outlet
Compressed air inlet
oil pressure
airend discharge temperature 1
airend discharge temperature 2
airend discharge temperature 3
compressed air outlet temperature
Pressure side pressure return circuit
Intake side pressure return circuit
Inlet control valve
condensate drain
Return valve
Relief control valve
DOT 1.00
DOT 1.01
DOT 2.00
DOT 2.01
-K1
-K2
-K3
-K10
option C40
wiring diagram
booster compressor
sensors/actuators
SKK-U3010.07
SC2 MCS
page 8
19 Sht.
Function:
Group of function:
Date 22.01.21
Drawn Sitter
Released Büchner

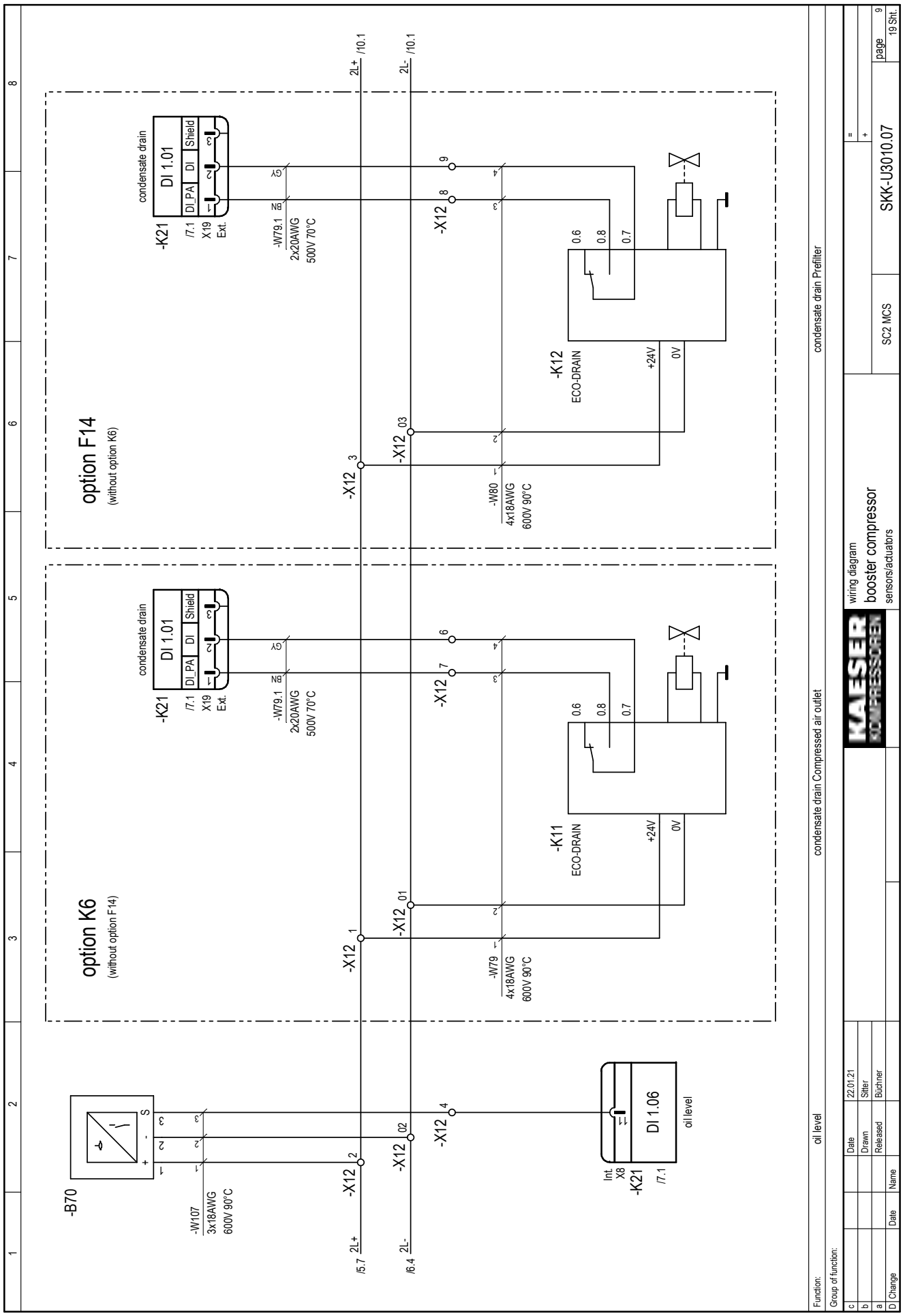
option F14
(without option K6)
condensate drain
DI 1.01
DI_PA
DI
Shield
-K21
/7.1
X19
Ext.
-W79.1
2x20AWG
500V 70°C
-X12
-K12
ECO-DRAIN
+24V
0V
-W80
4x18AWG
600V 90°C
2L+
2L-
/10.1
option K6
(without option F14)
-K11
-W79
-B70
-W107
3x18AWG
600V 90°C
/5.7
/6.4
DI 1.06
oil level
Int.
X8
condensate drain Compressed air outlet
condensate drain Prefilter
Function:
Group of function:
Date
Name
Drawn
Released
22.01.21
Sitter
Büchner
wiring diagram
booster compressor
sensors/actuators
SC2 MCS
SKK-U3010.07
page 9
19 Sht.

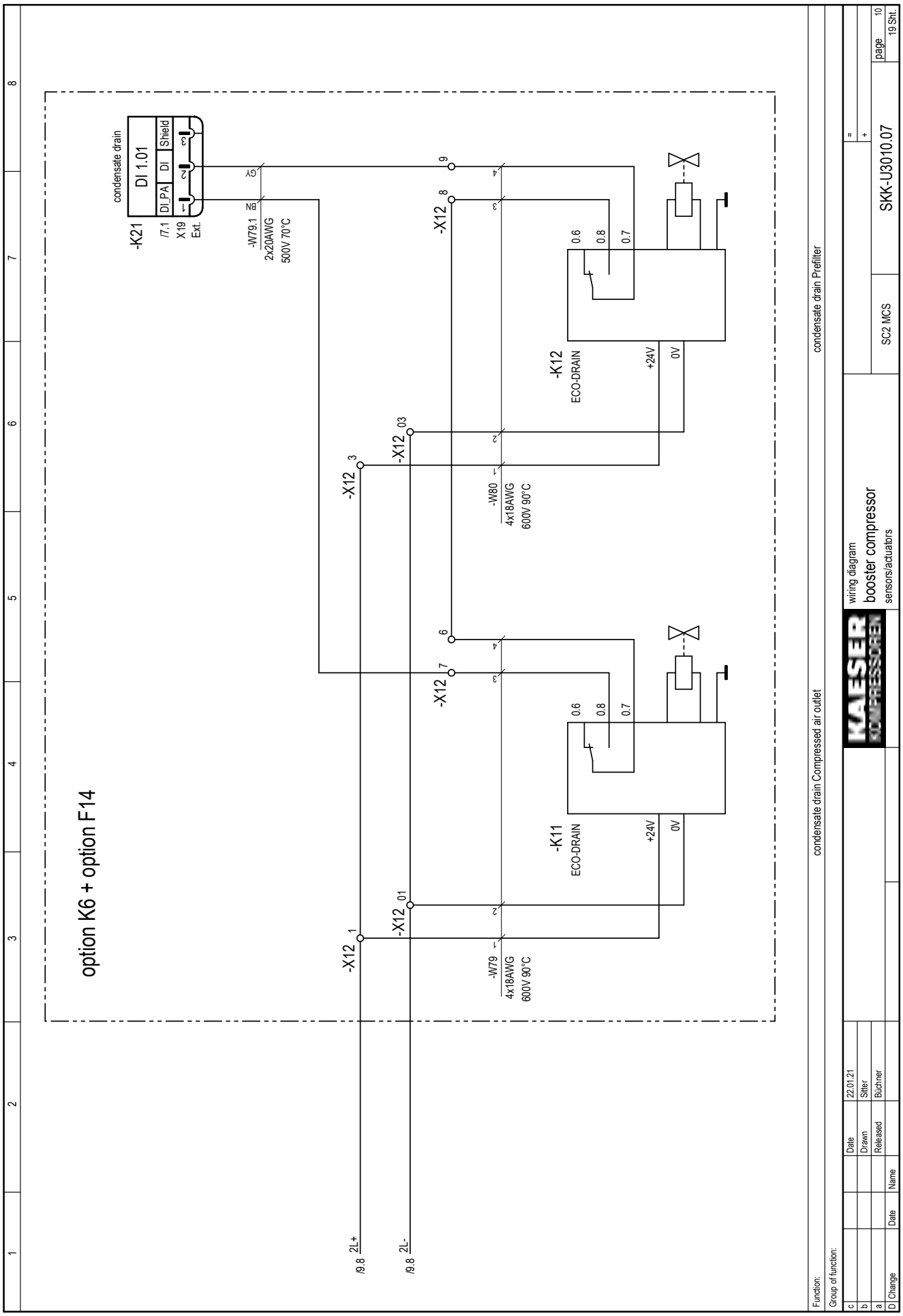
condensate drain
DI 1.01
DI_PA
DI
Shield
-K21
/7.1
X19
Ext.
-W79.1
2x20AWG
500V 70°C
GY
BN
-X12
-X12
-X12
-X12
-X12
-X12
-W80
4x18AWG
600V 90°C
-W79
4x18AWG
600V 90°C
-K12
ECO-DRAIN
-K11
ECO-DRAIN
+24V
0V
+24V
0V
option K6 + option F14
/9.8
2L+
/9.8
2L-
condensate drain Compressed air outlet
condensate drain Prefilter
Function:
Group of function:
Date
Drawn
Released
22.01.21
Sitter
Büchner
Name
wiring diagram
booster compressor
sensors/actuators
SC2 MCS
SKK-U3010.07
page 10
19 Sht.

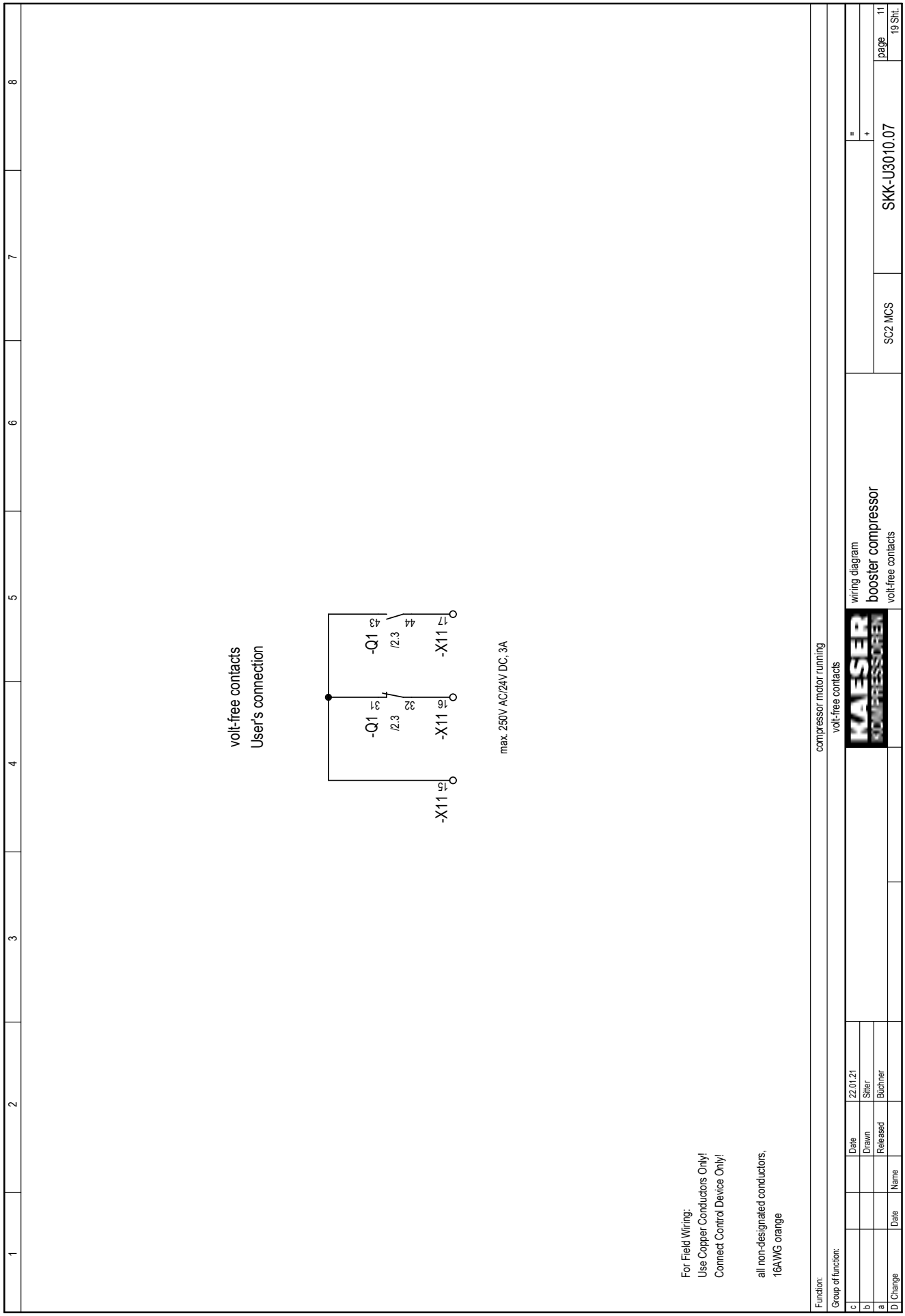
volt-free contacts
User's connection
-X11 15
-Q1 31
/2.3
32
-X11 16
-Q1 43
/2.3
44
-X11 17
max. 250V AC/24V DC, 3A
For Field Wiring:
Use Copper Conductors Only!
Connect Control Device Only!
all non-designated conductors,
16AWG orange
Function:
compressor motor running
volt-free contacts
Group of function:
c
b
a
D Change
Date
Name
Date
22.01.21
Drawn
Sitter
Released
Büchner
KAESER KOMPRESSOREN
wiring diagram
booster compressor
volt-free contacts
SC2 MCS
SKK-U3010.07
=
+
page 11
19 Sht.

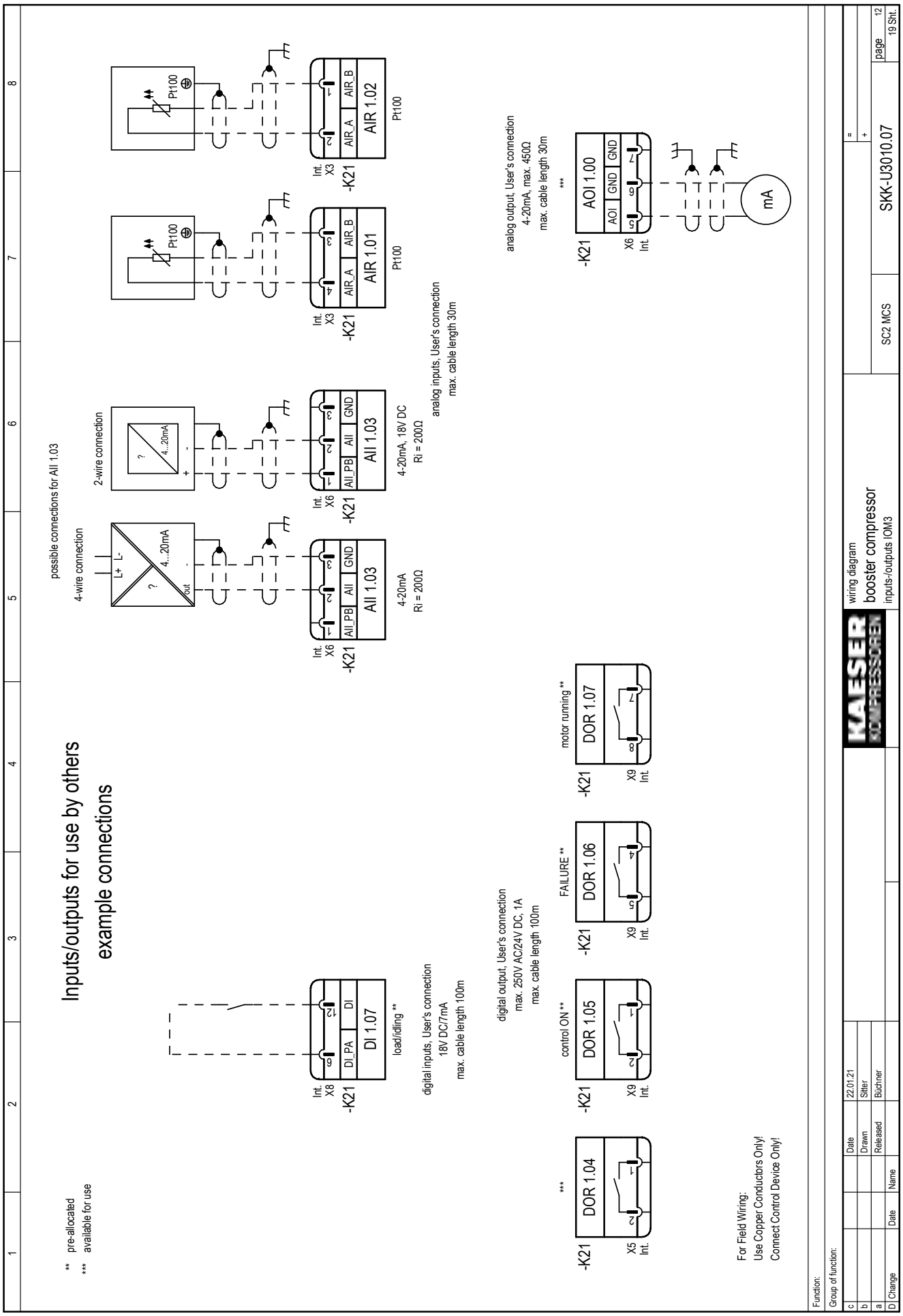
Inputs/outputs for use by others
example connections
** pre-allocated
*** available for use
possible connections for AII 1.03
4-wire connection
2-wire connection
4...20mA
L+ L-
out
Pt100
-K21
Int. X6
AII_PB AII GND
AII 1.03
4-20mA
Ri = 200Ω
4-20mA, 18V DC
Ri = 200Ω
analog inputs, User's connection
max. cable length 30m
Int. X3
AIR_A AIR_B
AIR 1.01
AIR 1.02
Pt100
analog output, User's connection
4-20mA, max. 450Ω
max. cable length 30m
AOI GND GND
AOI 1.00
mA
Int. X8
DI_PA DI
DI 1.07
load/idling **
digital inputs, User's connection
18V DC/7mA
max. cable length 100m
digital output, User's connection
max. 250V AC/24V DC, 1A
max. cable length 100m
control ON **
FAILURE **
motor running **
DOR 1.04
DOR 1.05
DOR 1.06
DOR 1.07
X5 Int.
X9 Int.
For Field Wiring:
Use Copper Conductors Only!
Connect Control Device Only!
Function:
Group of function:
Date
Drawn
Released
22.01.21
Sitter
Büchner
Name
D Change
wiring diagram
booster compressor
inputs-/outputs IOM3
SC2 MCS
SKK-U3010.07
page 12
19 Sht.

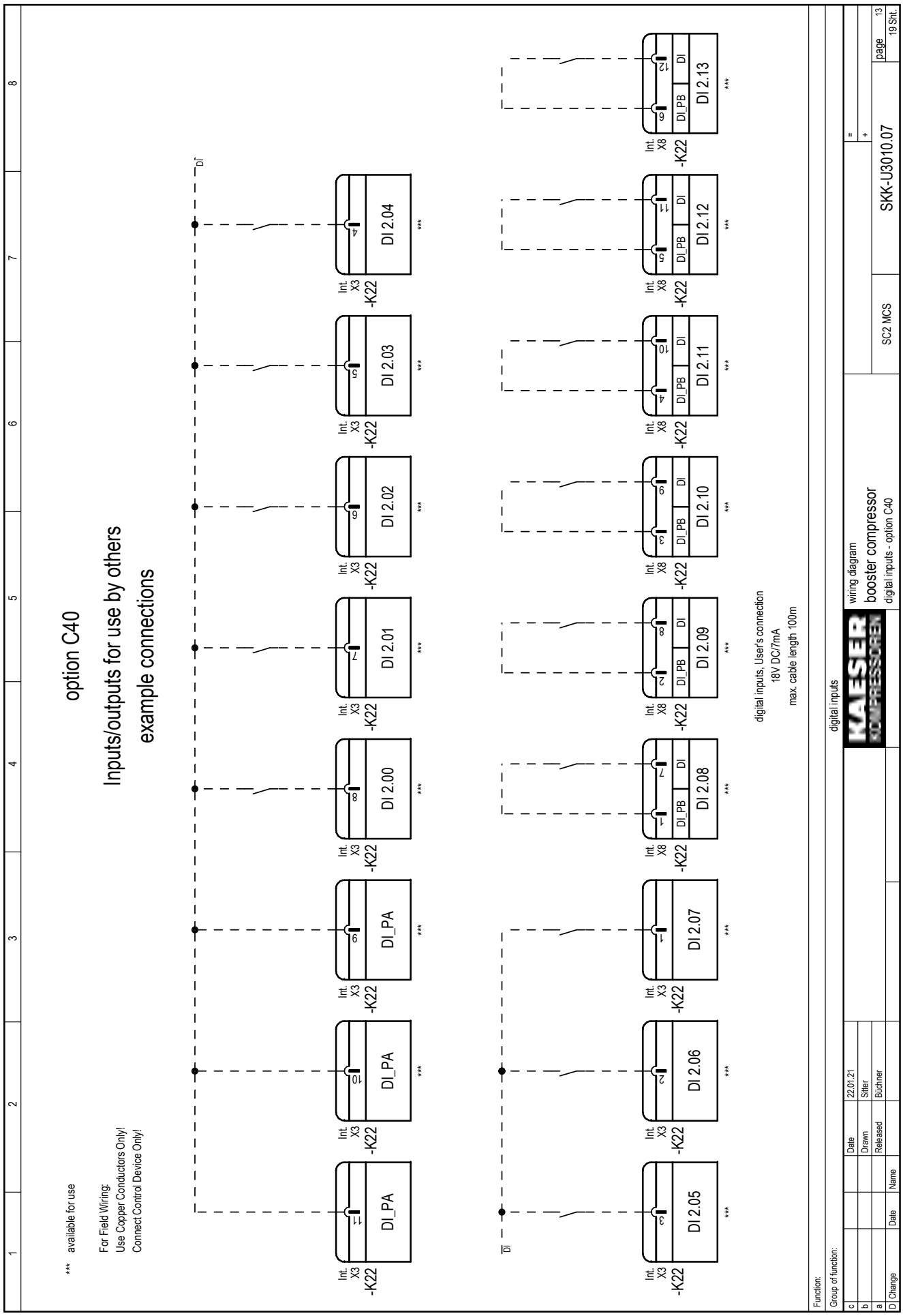
option C40
Inputs/outputs for use by others
example connections
*** available for use
For Field Wiring:
Use Copper Conductors Only!
Connect Control Device Only!
DI_PA
DI 2.00
DI 2.01
DI 2.02
DI 2.03
DI 2.04
DI 2.05
DI 2.06
DI 2.07
DI 2.08
DI 2.09
DI 2.10
DI 2.11
DI 2.12
DI 2.13
Int. X3
Int. X8
-K22
DI_PB
DI
digital inputs, User's connection
18V DC/7mA
max. cable length 100m
Function:
Group of function:
digital inputs
wiring diagram
booster compressor
digital inputs - option C40
SC2 MCS
SKK-U3010.07
page 13
19 Sht.
Date 22.01.21
Drawn Sitter
Released Büchner
Date Name
D Change

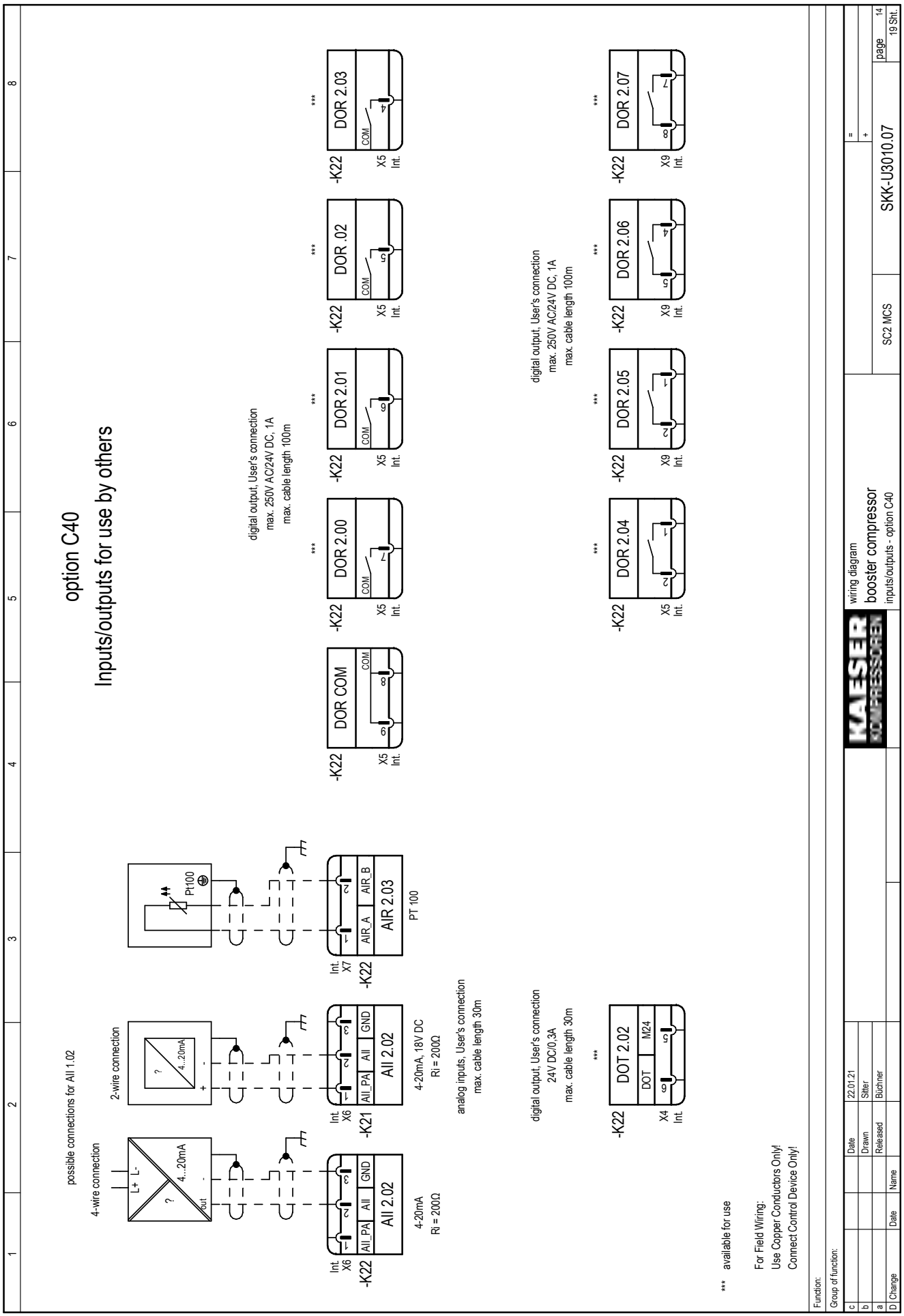
option C40
Inputs/outputs for use by others
possible connections for AII 1.02
4-wire connection
2-wire connection
L+ L-
4...20mA
Pt100
-K22
Int. X6
AII_PA
AII
GND
AII 2.02
-K21
4-20mA
Ri = 200Ω
4-20mA, 18V DC
Ri = 200Ω
analog inputs, User's connection
max. cable length 30m
Int. X7
AIR_A
AIR_B
AIR 2.03
PT 100
digital output, User's connection
max. 250V AC/24V DC, 1A
max. cable length 100m
DOR COM
DOR 2.00
DOR 2.01
DOR .02
DOR 2.03
COM
X5 Int.
digital output, User's connection
24V DC/0,3A
max. cable length 30m
DOT 2.02
DOT
M24
X4 Int.
DOR 2.04
DOR 2.05
DOR 2.06
DOR 2.07
X9 Int.
*** available for use
For Field Wiring:
Use Copper Conductors Only!
Connect Control Device Only!
Function:
Group of function:
Date
22.01.21
Drawn
Sitter
Released
Büchner
Name
D Change
wiring diagram
booster compressor
inputs/outputs - option C40
SC2 MCS
SKK-U3010.07
page 14
19 Sht.

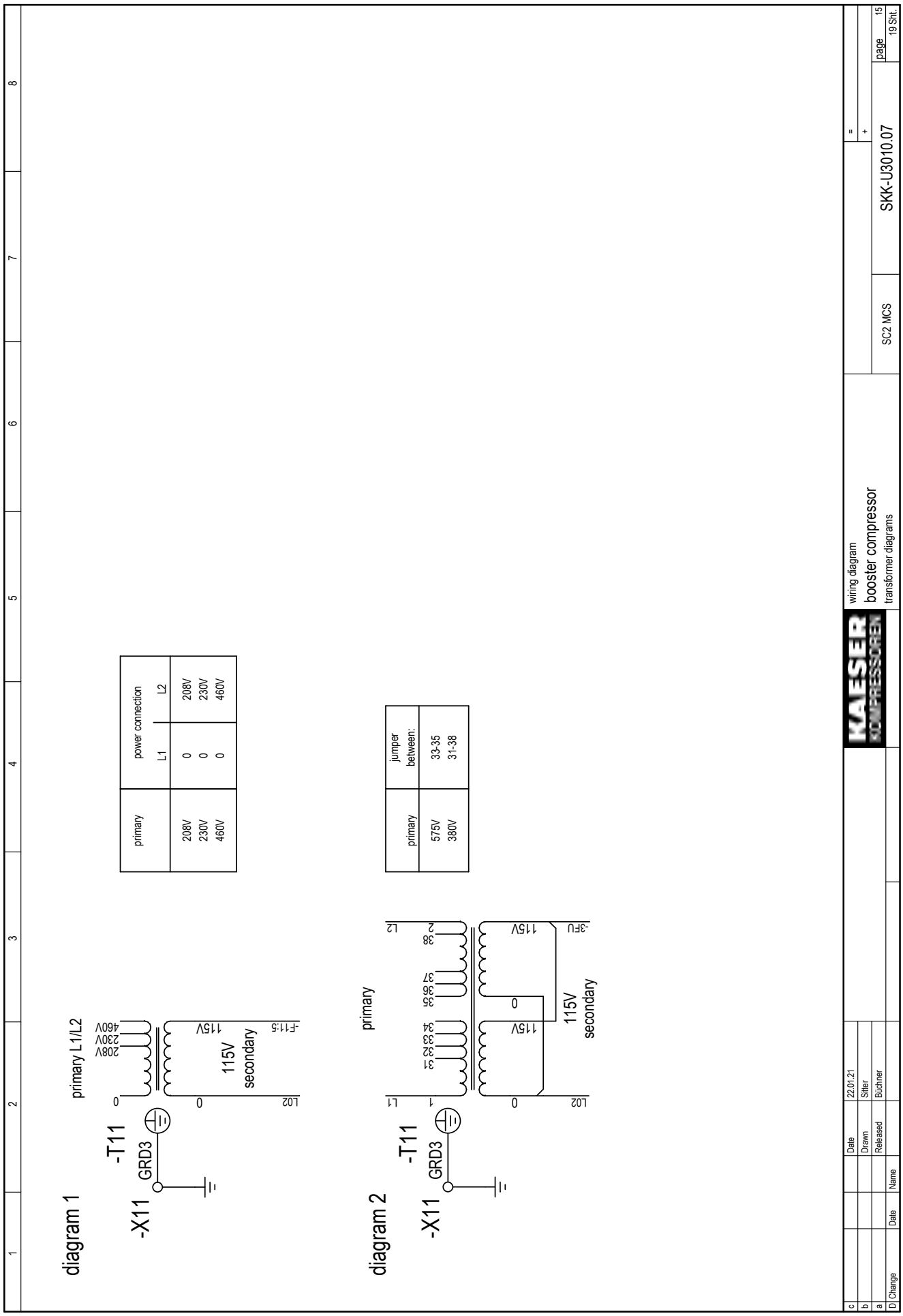
diagram 1
-X11
GRD3
-T11
primary L1/L2
208V
230V
460V
0
115V
secondary
-F11:5
115V
0
L02
diagram 2
-X11
GRD3
-T11
primary
L1
1
31
32
33
34
35
36
37
38
2
L2
115V
0
115V
0
L02
-3FU
115V
secondary
primary
power connection
L1
L2
208V
230V
460V
0
0
0
208V
230V
460V
primary
jumper between:
575V
380V
33-35
31-38
wiring diagram
booster compressor
transformer diagrams
KAESER KOMPRESSOREN
SC2 MCS
SKK-U3010.07
page 15
19 Sht.
Date
Drawn
Released
22.01.21
Sitter
Büchner
Date
Name
D Change
c
b
a

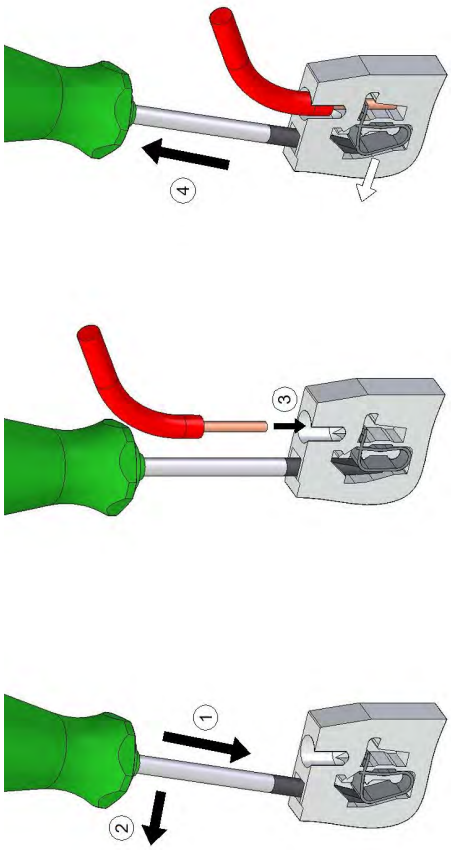


fig. 1: Handling: Control line terminal

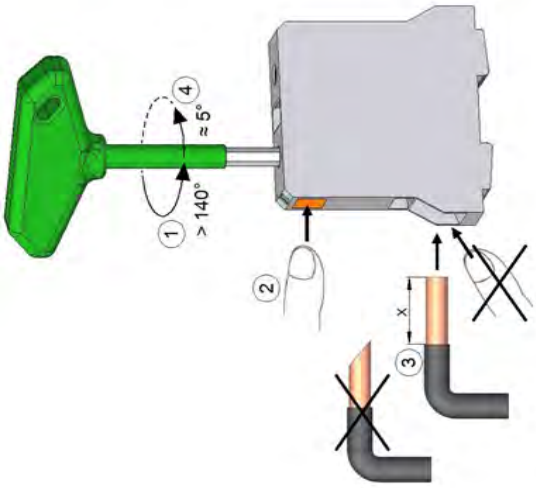


fig. 2: Handling: Supply terminal Wago

| | | | | |
|---|---|---|---|---|
| c | | | | |
| b | | Date | 22.01.21 | |
| a | | Drawn | Sitter | |
| D | Change | Released | Büchner | |
| | Date | Name | | |

wiring diagram
booster compressor
Handling: Terminals

KAESER KOMPRESSOREN

SC2 MCS

SKK-U3010.07

page 16 19 Sht.

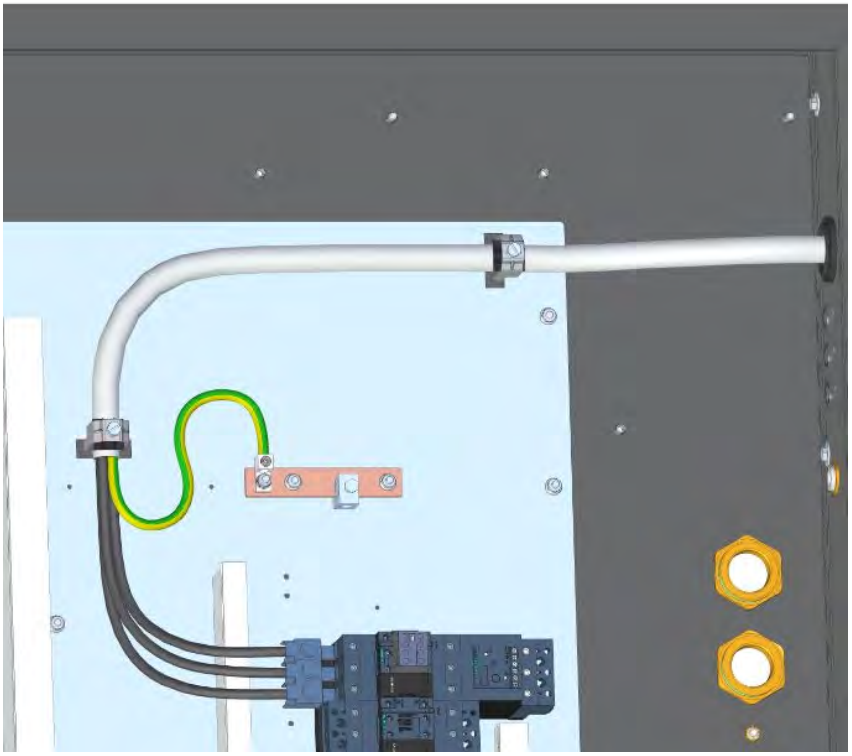

fig. 11: Feed line connection

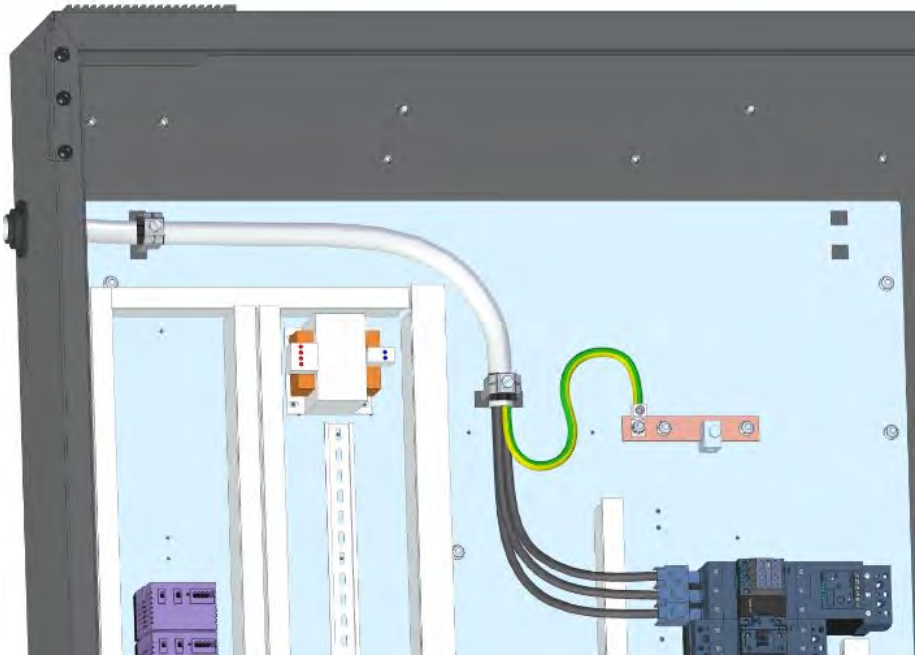

fig. 10: Feed line connection

| | | | | | |
|---|---|---|---|---|---|
| c | | | | | |
| b | | | Date | 22.01.21 | |
| a | | | Drawn | Sitter | |
| D | Change | Date | Released | Büchner | |
| | | Name | | | |

wiring diagram
booster compressor
Feed line connection

KAESER KOMPRESSOREN

SC2 MCS

SKK-U3010.07

page 17
19 Sht.

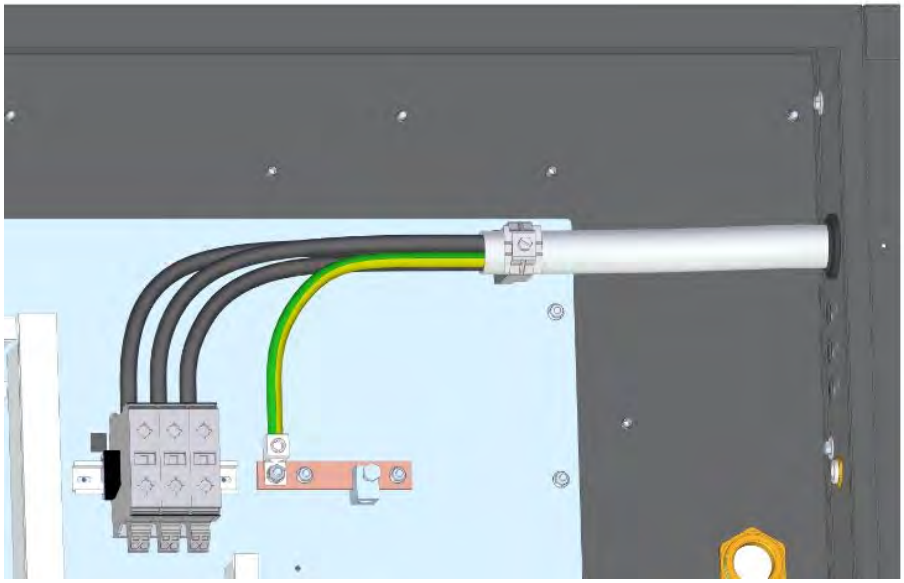

fig. 13: Feed line connection

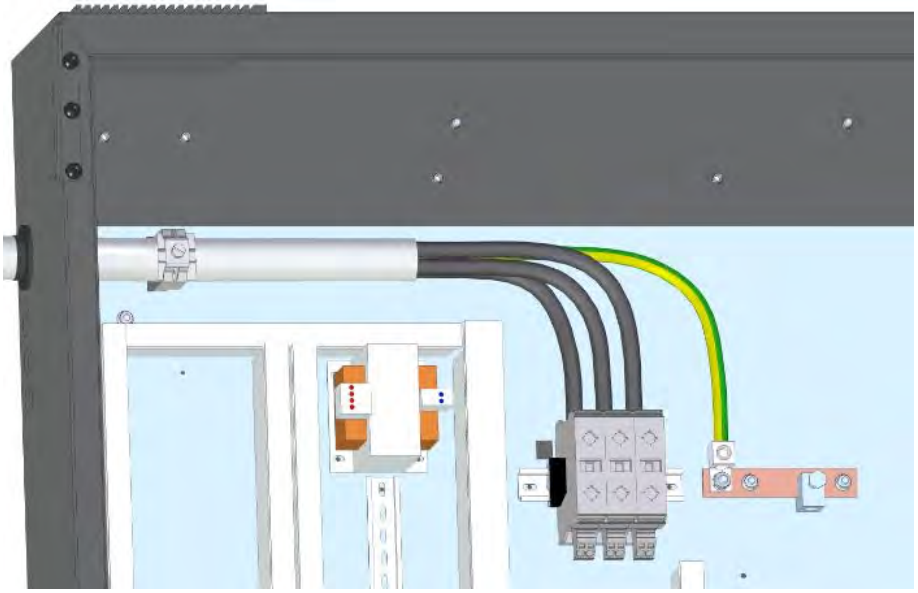

fig. 12: Feed line connection

| | | | |
|---|---|---|---|
| c | | | |
| b | | Date | 22.01.21 |
| a | | Drawn | Sitter |
| D | Change | Released | Büchner |
| | Date | | |
| | Name | | |

wiring diagram
booster compressor
Feed line connection

KAESER KOMPRESSOREN

SC2 MCS

SKK-U3010.07

page 18
19 Sht.

fig. 20: Feed line connection

GRD

| terminal model | Wire Size Copper (solid to semirigid stranded) AWG / MCM | Wire Size Copper flexible * AWG / MCM | Torque lb - in |
|---|---|---|---|
| S2/0 | --- | 1/0 - 1 | 75 |
| S2/0 | --- | 1 - 4 | 55 |
| S2/0 | 2/0 - 3 | 4 - 8 | 50 |
| S2/0 | 4 - 6 | 8 - 10 | 45 |
| S2/0 | 8 | 10 - 14 | 40 |
| S2/0 | 10 - 14 | --- | 35 |

* Stranding classes G, H, I/DLO, Metric class 5 and K/MTW

fig. 21: Feed line connection

GRD

| terminal model | Wire Size Copper (solid to semirigid stranded) AWG / MCM | Wire Size Copper flexible * AWG / MCM | Torque lb - in |
|---|---|---|---|
| S300 | 300 - 2 | 4/0 - 2 | 375 |
| S300 | 2 - 6 | 2 - 6 | 275 |

* Stranding classes G, H, I/DLO, Metric class 5 and K/MTW

fig. 22: Feed line connection

GRD

| terminal model | Wire Size Copper (solid to semirigid stranded) AWG / MCM | Wire Size Copper flexible * AWG / MCM | Torque lb - in |
|---|---|---|---|
| S500 | 500 - 4 | 350 - 4 | 500 |

* Stranding classes G, H, I/DLO, Metric class 5 and K/MTW

| | | | | | |
|---|---|---|---|---|---|
| c | | | Date | 22.01.21 | |
| b | | | Drawn | Sitter | |
| a | | | Released | Büchner | |
| D | Change | Date | Name | | |

KAESER KOMPRESSOREN

wiring diagram
booster compressor
Feed line connection

SC2 MCS | SKK-U3010.07 | page 19 / 19 Sht.

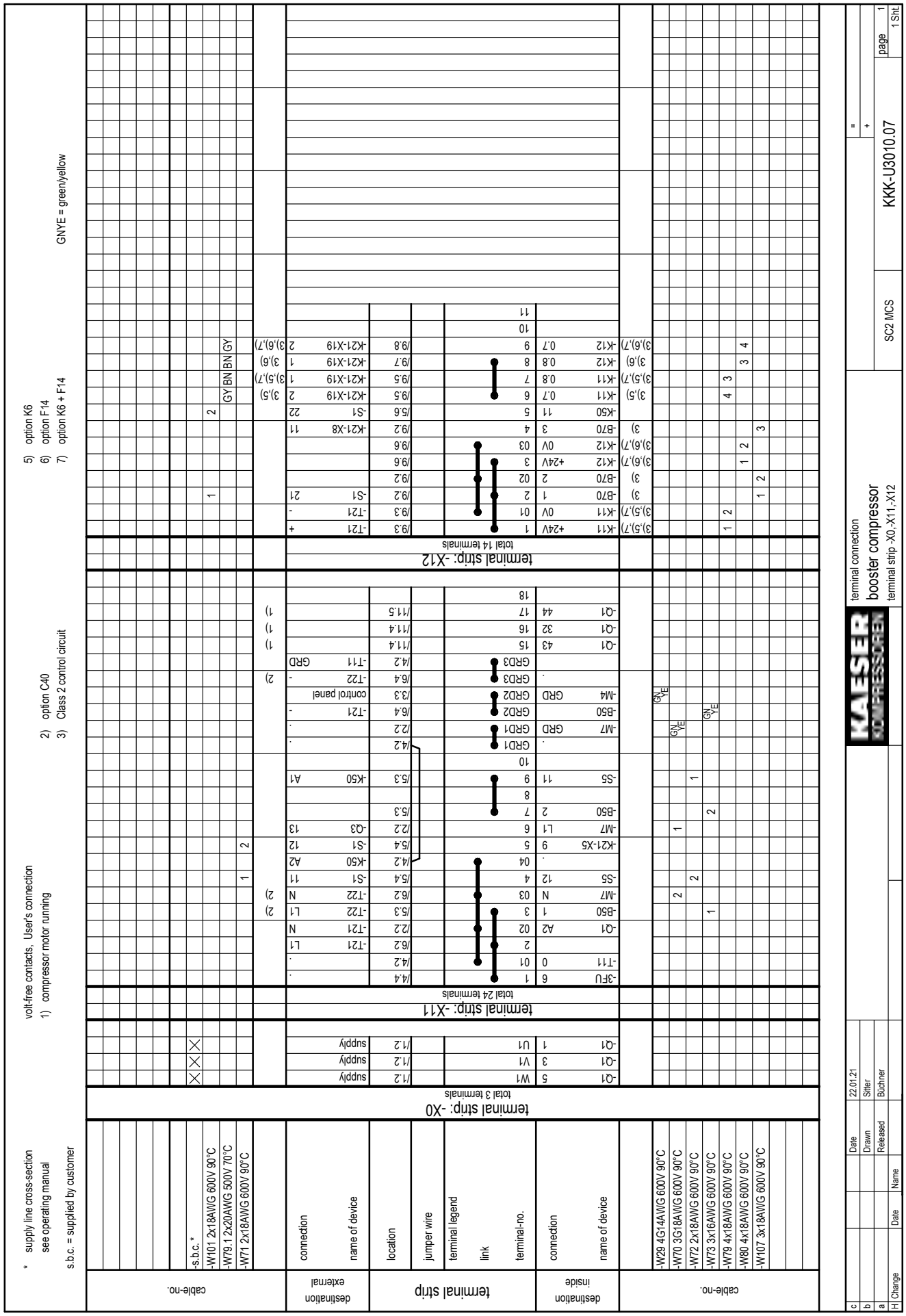
* supply line cross-section see operating manual
s.b.c. = supplied by customer
volt-free contacts, User's connection
1) compressor motor running
2) option C40
3) Class 2 control circuit
5) option K6
6) option F14
7) option K6 + F14
GNYE = green/yellow
terminal strip: -X0
total 3 terminals
terminal strip: -X11
total 24 terminals
terminal strip: -X12
total 14 terminals
cable-no.
destination external
terminal strip
destination inside
cable-no.
-s.b.c. *
-W101 2x18AWG 600V 90°C
-W79.1 2x20AWG 500V 70°C
-W71 2x18AWG 600V 90°C
connection
name of device
location
jumper wire
terminal legend
link
terminal-no.
connection
name of device
-W29 4G14AWG 600V 90°C
-W70 3G18AWG 600V 90°C
-W72 2x18AWG 600V 90°C
-W73 3x16AWG 600V 90°C
-W79 4x18AWG 600V 90°C
-W80 4x18AWG 600V 90°C
-W107 3x18AWG 600V 90°C
Date 22.01.21
Drawn Sitter
Released Büchner
Date Name
H Change
terminal connection
booster compressor
terminal strip -X0,-X11,-X12
SC2 MCS
KKK-U3010.07
page 1
1 Sht.

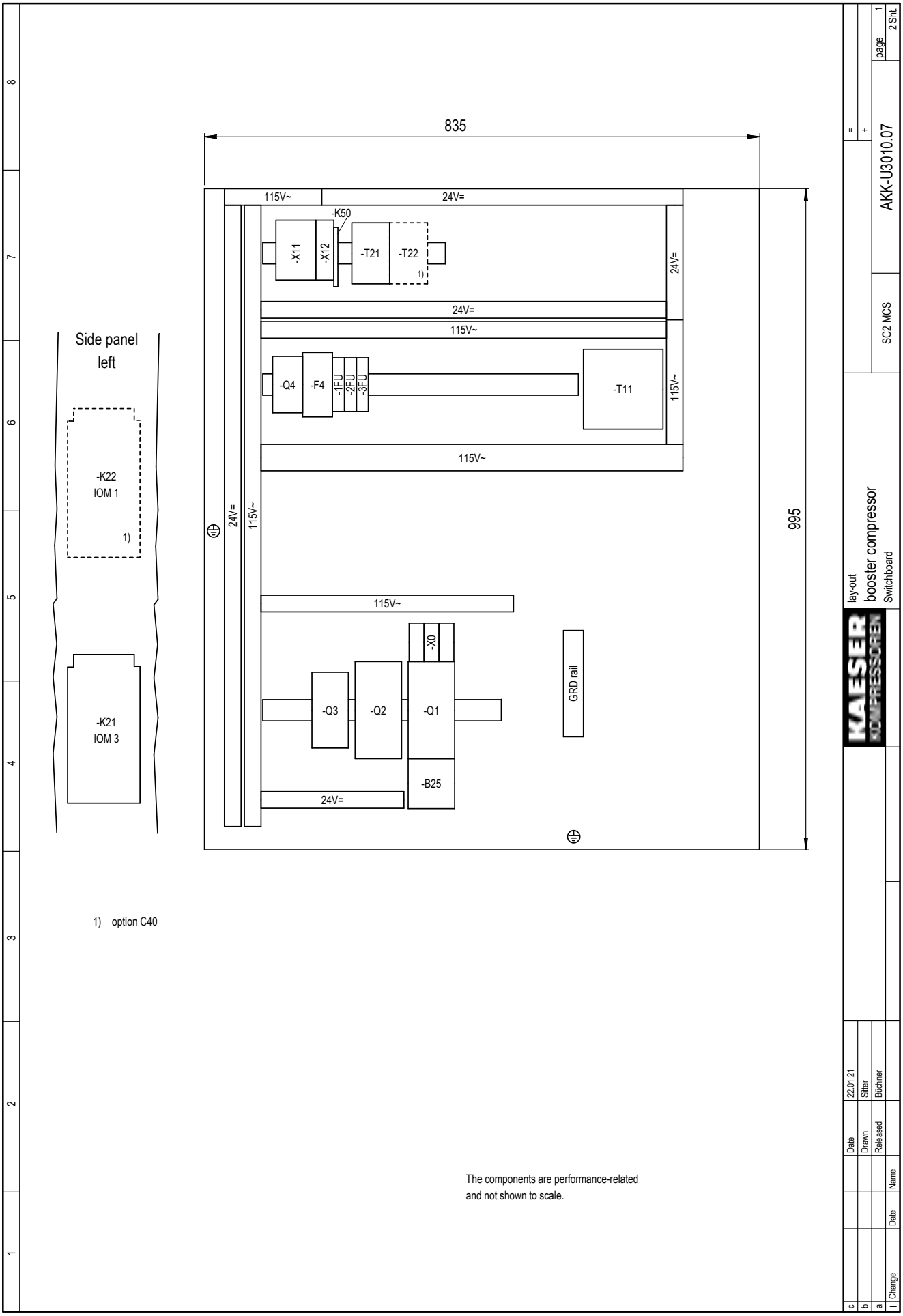
835
995
115V~
24V=
-K50
-X11
-X12
-T21
-T22
1)
24V=
24V=
115V~
-Q4
-F4
-1FU
-2FU
-3FU
-T11
115V~
115V~
24V=
115V~
Side panel
left
-K22
IOM 1
1)
-K21
IOM 3
115V~
-X0
-Q3
-Q2
-Q1
GRD rail
-B25
24V=
1) option C40
The components are performance-related
and not shown to scale.
AKK-U3010.07
SC2 MCS
page 1
2 Sht.
lay-out
booster compressor
Switchboard
KAESER KOMPRESSOREN
Date 22.01.21
Drawn Sitter
Released Büchner
Name
Date
Change
c
b
a

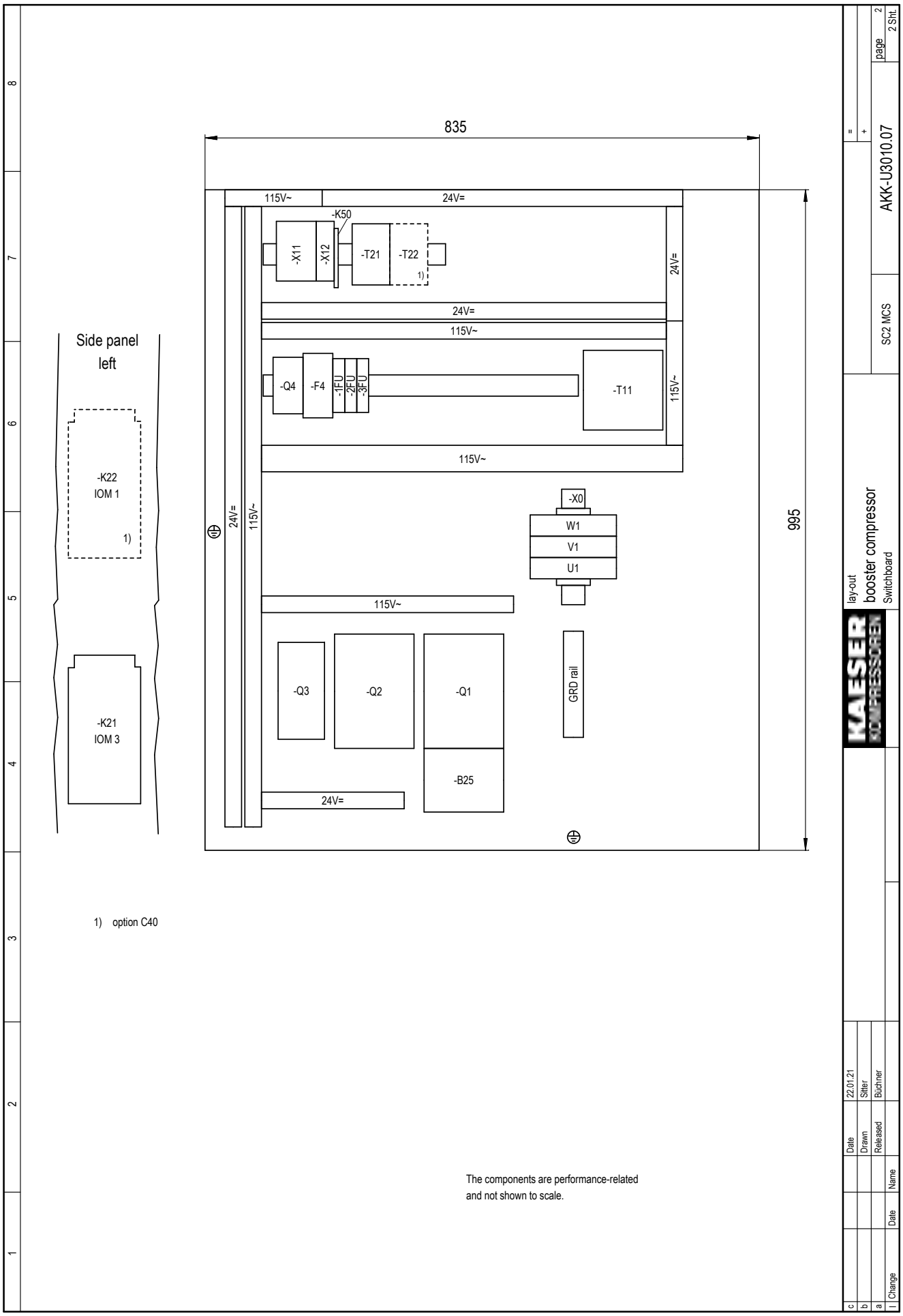
835
995
115V~
24V=
-K50
-X11
-X12
-T21
-T22
1)
24V=
115V~
-Q4
-F4
-1FU
-2FU
-3FU
-T11
115V~
-X0
W1
V1
U1
-Q3
-Q2
-Q1
GRD rail
-B25
Side panel
left
-K22
IOM 1
1)
-K21
IOM 3
1) option C40
The components are performance-related
and not shown to scale.
AKK-U3010.07
SC2 MCS
page 2
2 Sht.
lay-out
booster compressor
Switchboard
KAESER KOMPRESSOREN
22.01.21
Date
Drawn
Released
Silter
Büchner
Name
Change

## 13.4 Determining the permissible initial pressure

Use the following diagrams to determine the permissible initial pressure.

The following data can be found in the diagrams:

- Model
- Airend
- Main system frequency
- Unit of pressure
- Block RPM
- imin = Minimally permissible compression ratio of the machine
- imax = Maximally permissible compression ratio of the machine
- To = Intake temperature
- Tu = Ambient temperature
- p1 = Initial pressure
- p4 = Discharge pressure

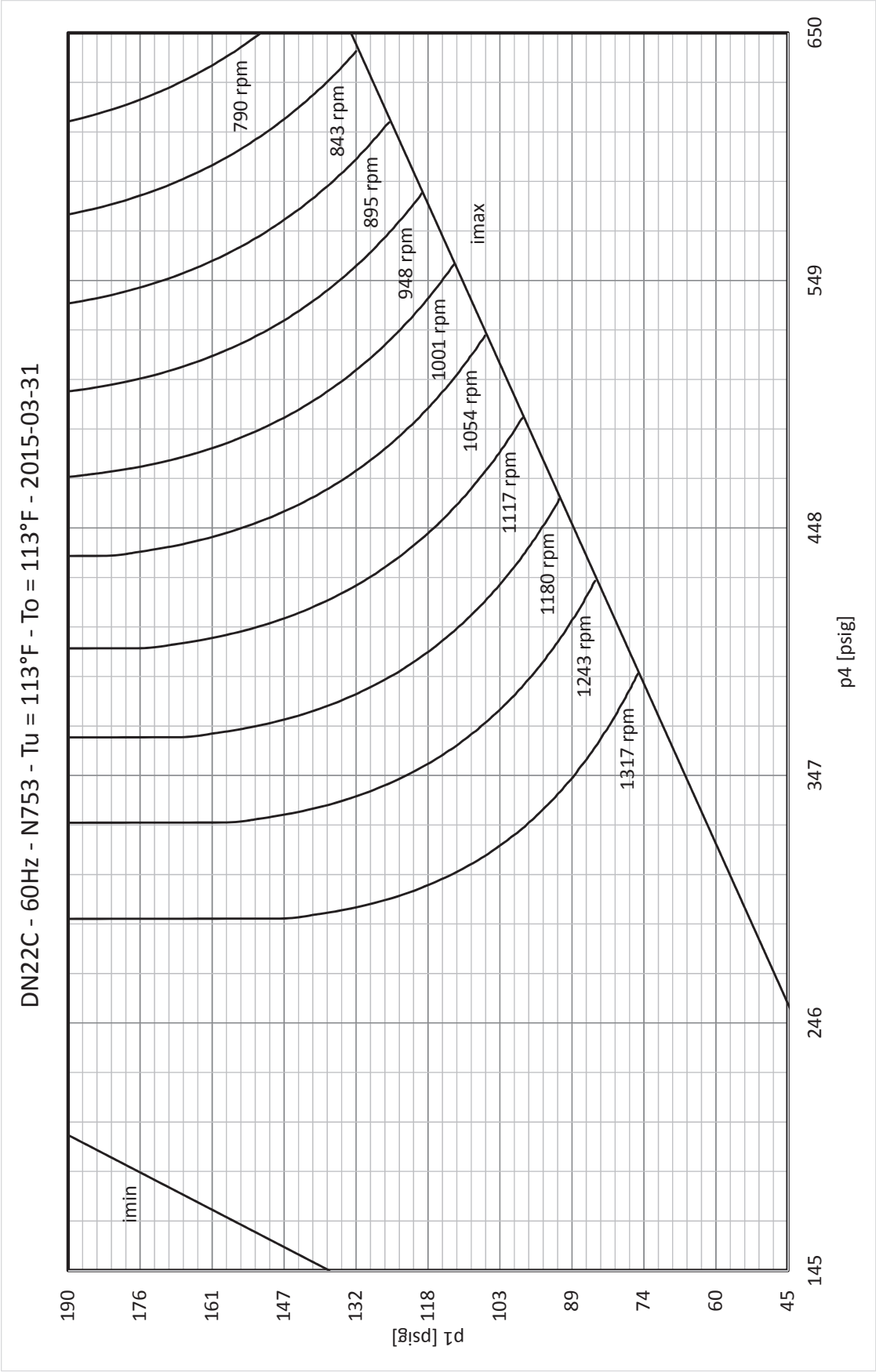
DN22C - 60Hz - N753 - Tu = 113°F - To = 113°F - 2015-03-31
p1 [psig]
190
176
161
147
132
118
103
89
74
60
45
145
246
347
448
549
650
p4 [psig]
imin
imax
790 rpm
843 rpm
895 rpm
948 rpm
1001 rpm
1054 rpm
1117 rpm
1180 rpm
1243 rpm
1317 rpm
Version 1
TB/Hollauer

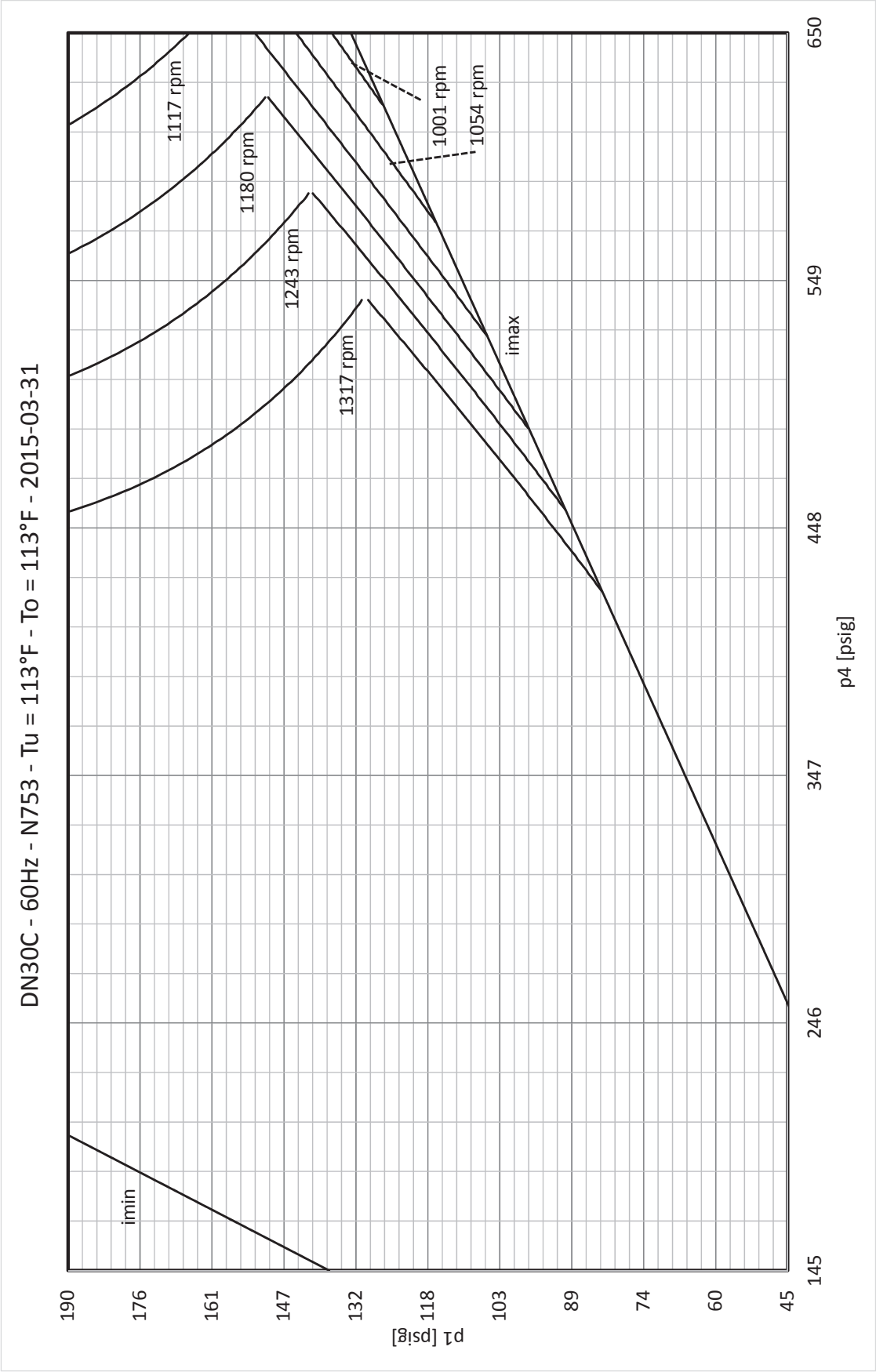


Version 1

TB/Hollauer

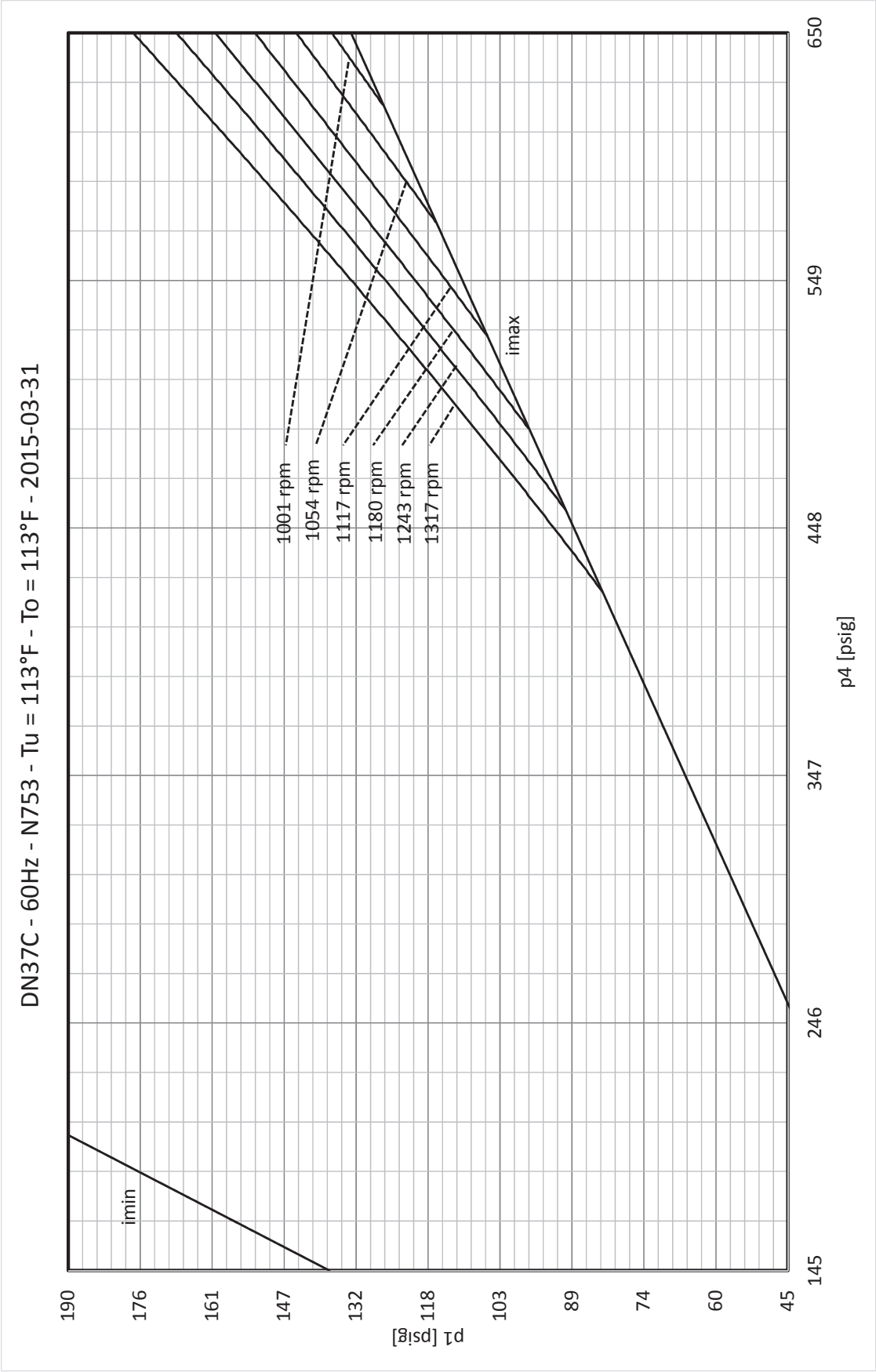
DN37C - 60Hz - N753 - Tu = 113°F - To = 113°F - 2015-03-31
imin
imax
1001 rpm
1054 rpm
1117 rpm
1180 rpm
1243 rpm
1317 rpm
p1 [psig]
190
176
161
147
132
118
103
89
74
60
45
p4 [psig]
145
246
347
448
549
650
Version 1
TB/Hollauer

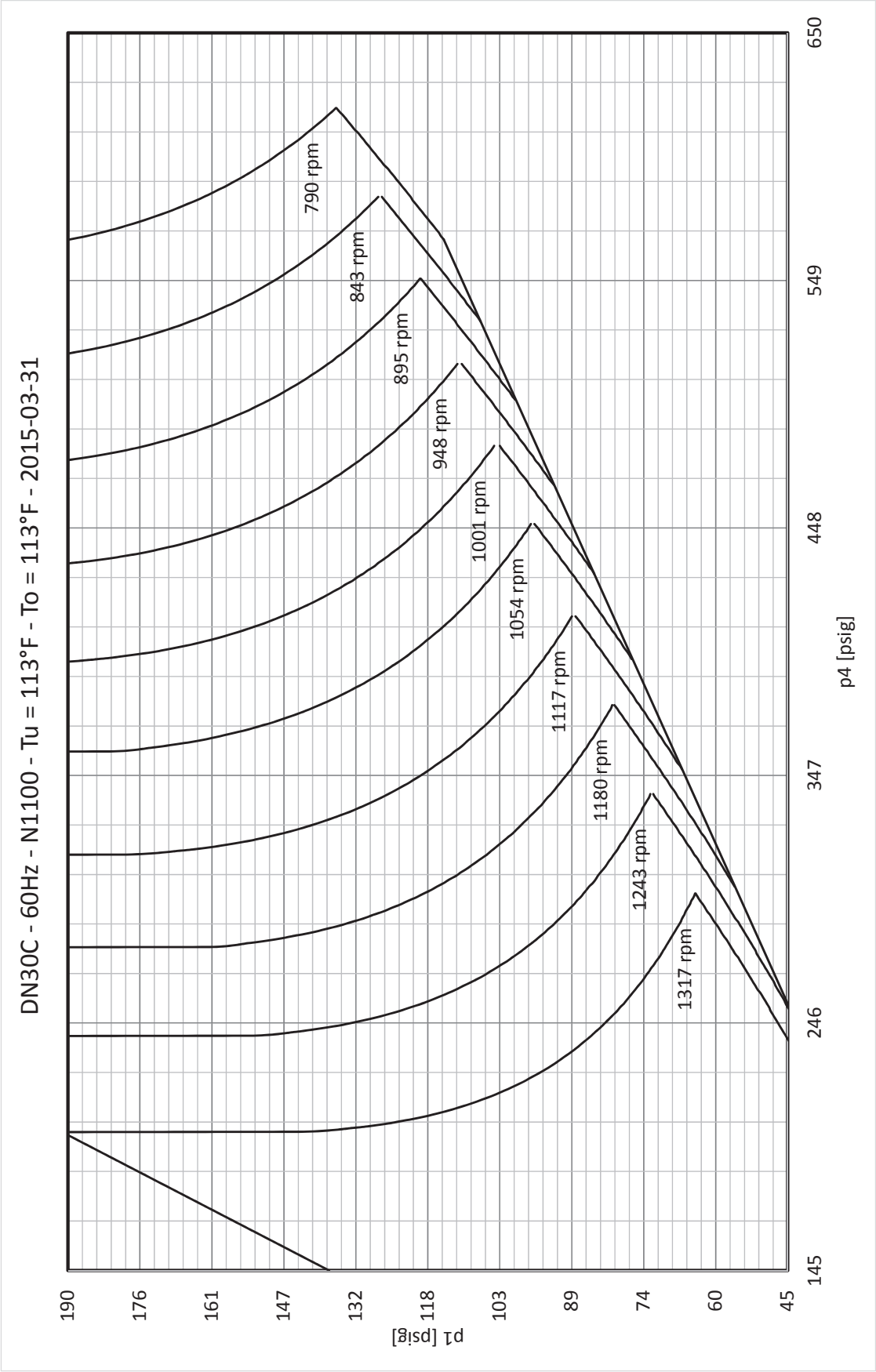
DN30C - 60Hz - N110O - Tu = 113°F - To = 113°F - 2015-03-31
790 rpm
843 rpm
895 rpm
948 rpm
1001 rpm
1054 rpm
1117 rpm
1180 rpm
1243 rpm
1317 rpm
p1 [psig]
190
176
161
147
132
118
103
89
74
60
45
p4 [psig]
145
246
347
448
549
650
Version 1
TB/Hollauer

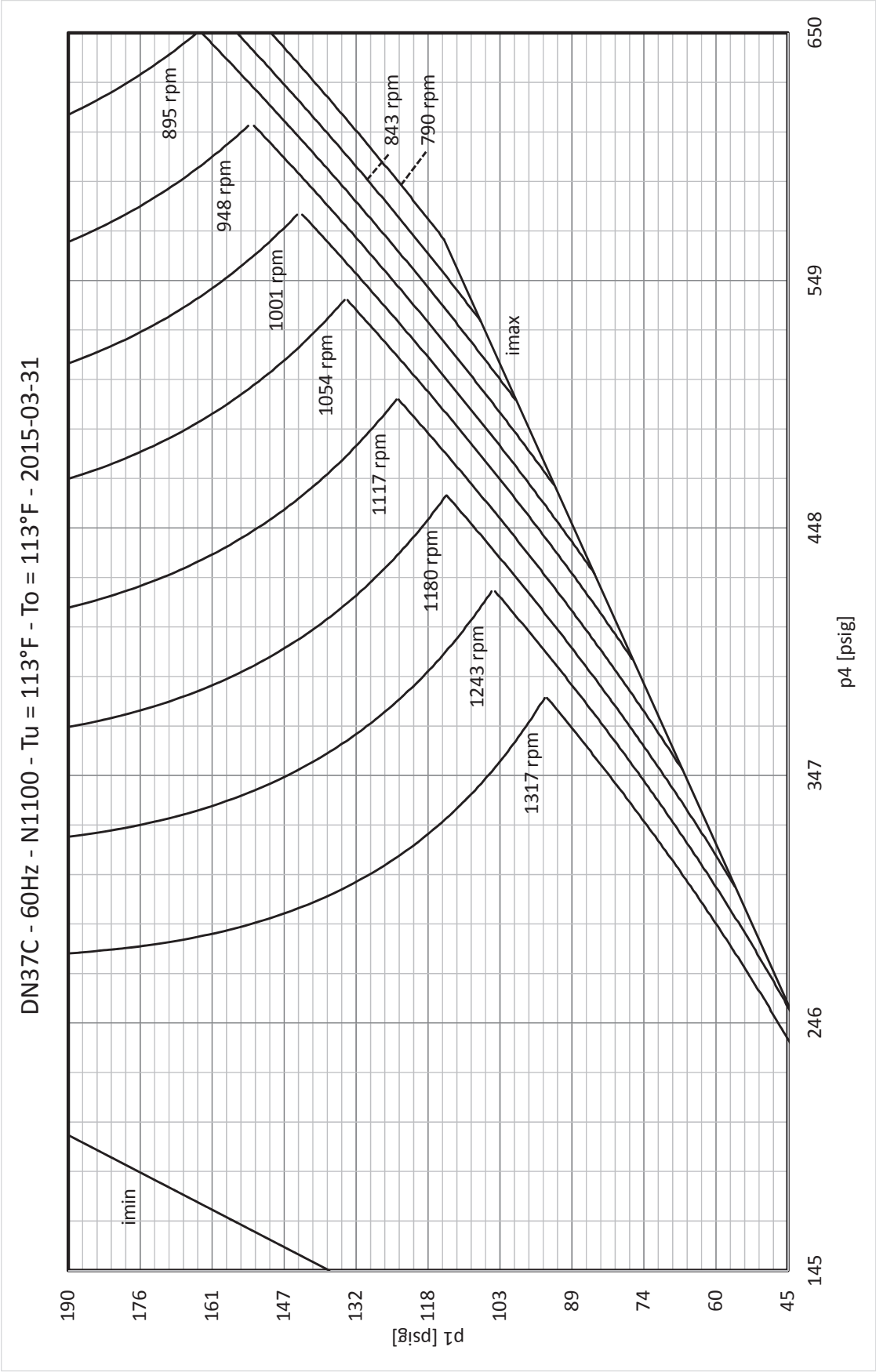
DN37C - 60Hz - N1100 - Tu = 113°F - To = 113°F - 2015-03-31
p1 [psig]
190
176
161
147
132
118
103
89
74
60
45
145
246
347
448
549
650
p4 [psig]
imin
imax
895 rpm
948 rpm
1001 rpm
1054 rpm
1117 rpm
1180 rpm
1243 rpm
1317 rpm
843 rpm
790 rpm
Version 1
TB/Hollauer

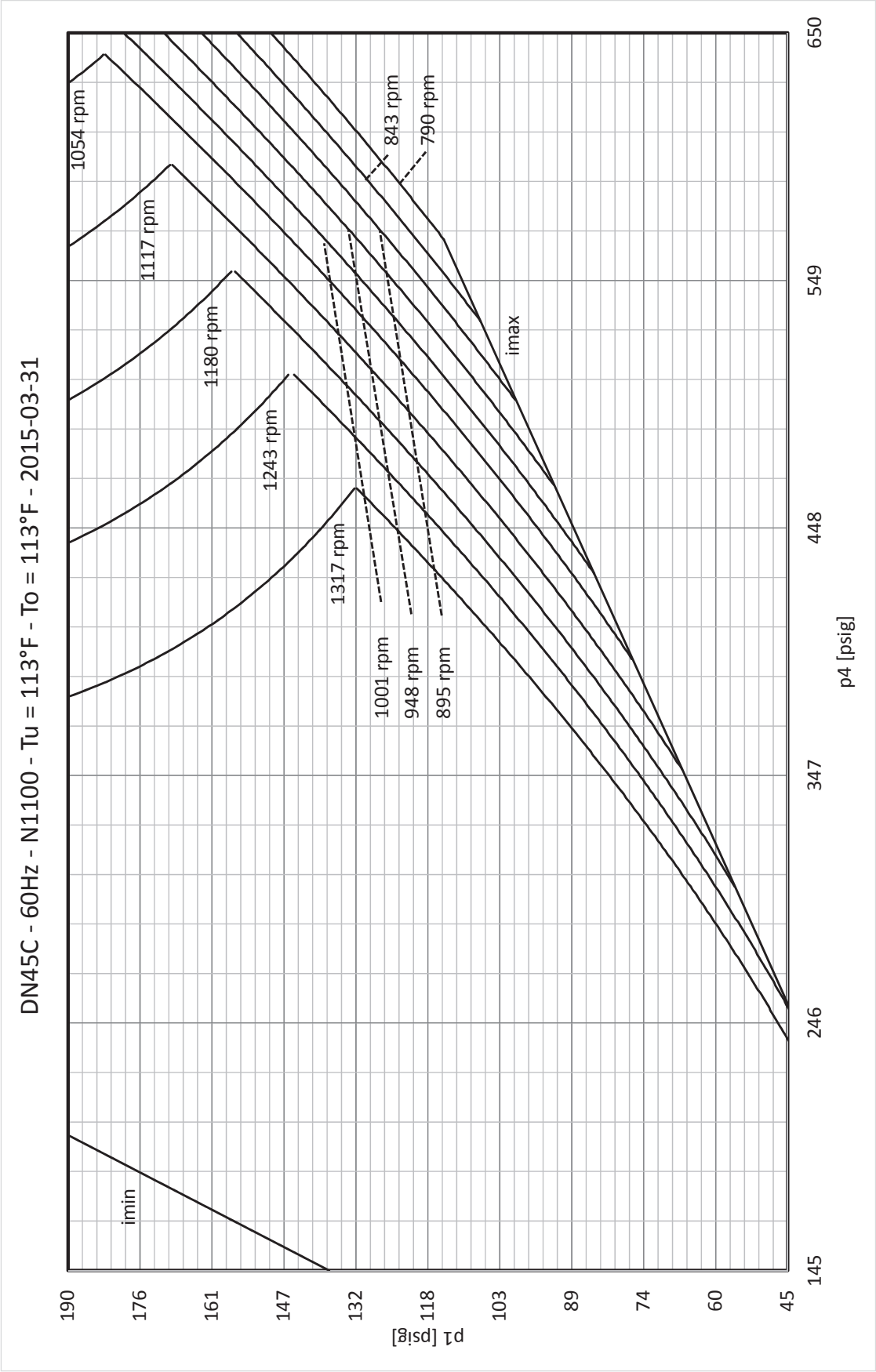


Version 1

TB/Hollauer

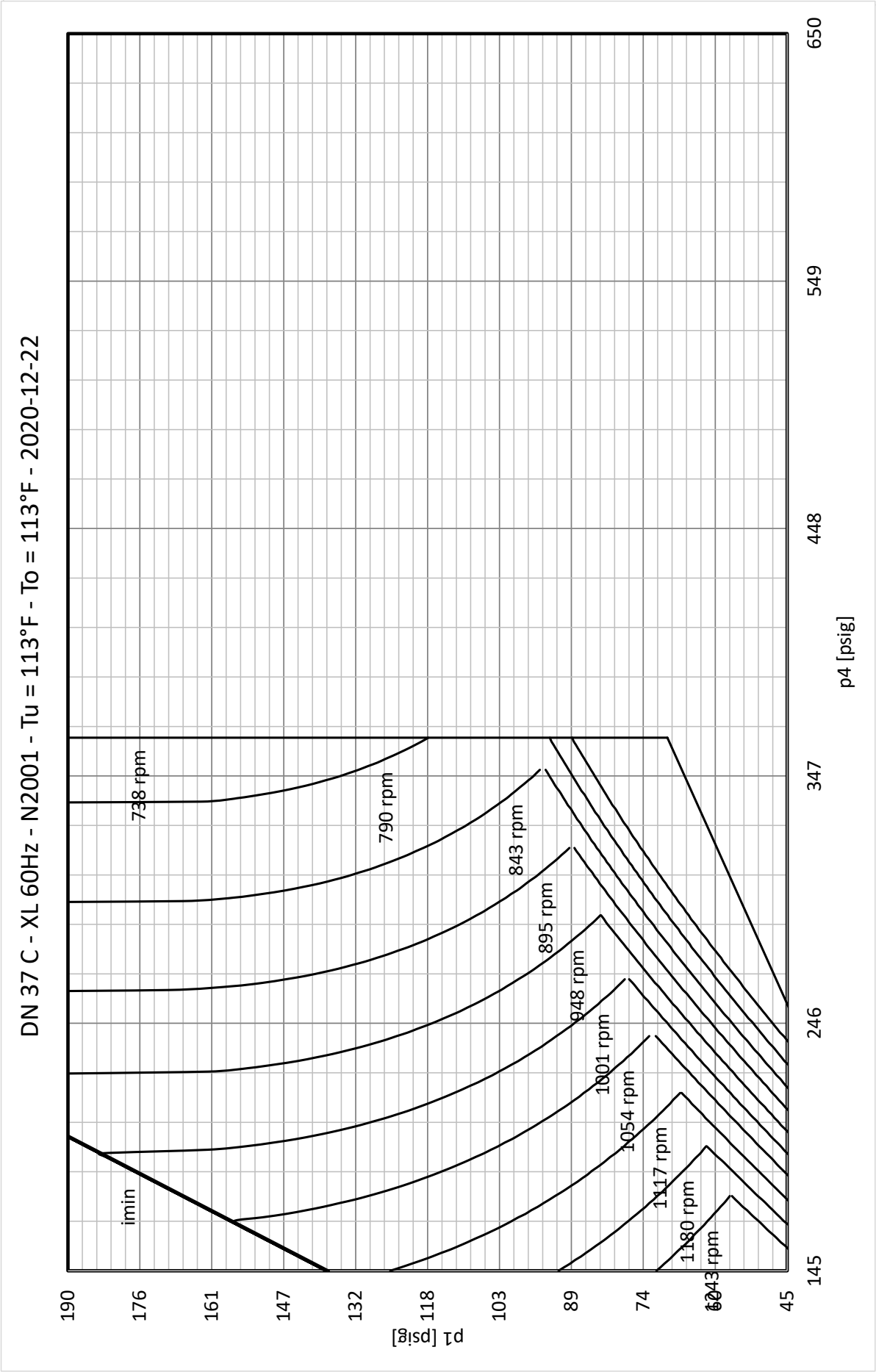
DN 37 C - XL 60Hz - N2001 - Tu = 113°F - To = 113°F - 2020-12-22
imin
738 rpm
790 rpm
843 rpm
895 rpm
948 rpm
1001 rpm
1054 rpm
1117 rpm
1180 rpm
1243 rpm
p1 [psig]
190
176
161
147
132
118
103
89
74
60
45
p4 [psig]
145
246
347
448
549
650
Version 1
TB/Hollauer

## 13.5 Safety relief valve data sheet

### 13.5.1 Data Sheet 1 of 4

# Safety valves

| Type SVW/SVWN/SVWC | DN 8 | PN 50 | -25 to 180 °C | type tested CE 0036 |
|---|---|---|---|---|

**Use area:**

⇨ for compressed air and other gases of the fluid group 2;

⇨ blow-off freely, therefore not suitable for fluids and steam.

**Models**

SVW ⇨ 2.0401 (brass)
SVWC ⇨ 1.4104 (stainless steel)
SVWN ⇨ 1.4571 (stainless steel)

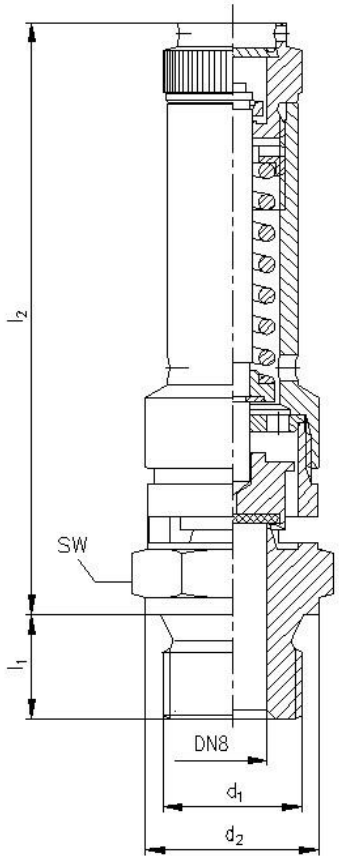


**Characteristics:**
open types +++ elastic valve seat seal (Viton) +++ compression spring stainless steel +++ ventilate with knurled thumb screw +++ connection with spigot +++ product-mark TÜV and GL +++ TÜV- and GL-individual inspection +++ certificates according to EN 10204 possible.

| connection-tap ($d_1$) | area of differential test pressure [bar] | $d_2$ [mm] | $l_1$ [mm] | $l_2$ [mm] | SW SVW | SW SVWN SVWC |
|---|---|---|---|---|---|---|
| M16x1,5 | 0,2 – 14,20 | 20 | 12 | 63 | 20 | 22 |
| | 14,21 – 39,90 | | | 75 | | |
| | 39,91 – 50,00 | | | 82 | | |
| G1/4 A | 0,2 – 14,20 | 18 | 10 | 63 | | |
| | 14,21 – 39,90 | | | 75 | | |
| | 39,91 – 50,00 | | | 82 | | |
| G3/8 A | 0,2 – 14,20 | 20 | 12 | 63 | | |
| | 14,21 – 39,90 | | | 75 | | |
| | 39,91 – 50,00 | | | 82 | | |
| G1/2 A | 0,2 – 14,20 | 24 | 14 | 63 | 24 | 24 |
| | 14,21 – 39,90 | | | 75 | | |
| | 39,91 – 50,00 | | | 82 | | |

**Order description:** (Please pay attention to the indication on the back sheet)

e.g. SVW 8 – 11 bar – G ¼ A – ...

- special wishes
- spigot
- differential test pressure
- nominal size
- type

Changes in the sense of the technical progress reserve.

**Armaturen- und Metallwerke Zöblitz GmbH**
Bahnhofstraße 16, 09496 Marienberg Tel. 037363 480-0 / Fax 037363 480-90
Internet: www.armaturen-zoeblitz.de e-mail: info@armaturen-zoeblitz.de
TDB-8.0308.0-D_03E

page 1/2

# Safety valves

| Type SVW/SVWN/SVWC | DN 8 | PN 50 | -25 to 180 °C | type tested CE 0036 |
|---|---|---|---|---|

**blow-off value**

| $p_e$ [bar] | qm [m³/h] at 0°C/760 Torr | $p_e$ [bar] | qm [m³/h] at 0°C/760 Torr | $p_e$ [bar] | qm [m³/h] at 0°C/760 Torr |
|---|---|---|---|---|---|
| 0,2 | 13,6 | 14 | 356,4 | 33 | 811,2 |
| 0,8 | 19,3 | 15 | 380,4 | 34 | 835,1 |
| 0,9 | 37,6 | 16 | 404,3 | 35 | 859,0 |
| 1,4 | 48,1 | 17 | 428,2 | 36 | 883,0 |
| 1,9 | 58,6 | 18 | 452,2 | 37 | 906,9 |
| 2 | 69,2 | 19 | 476,1 | 38 | 930,8 |
| 2,5 | 81,2 | 20 | 500,0 | 39 | 954,8 |
| 3 | 93,2 | 21 | 524,0 | 40 | 978,7 |
| 3,5 | 105,1 | 22 | 547,9 | 41 | 1.002,6 |
| 4 | 117,1 | 23 | 571,8 | 42 | 1.026,6 |
| 5 | 141,0 | 24 | 595,8 | 43 | 1.050,5 |
| 6 | 165,0 | 25 | 619,7 | 44 | 1.074,4 |
| 7 | 188,9 | 26 | 643,6 | 45 | 1.098,4 |
| 8 | 212,8 | 27 | 667,6 | 46 | 1.122,3 |
| 9 | 236,4 | 28 | 691,5 | 47 | 1.146,3 |
| 10 | 260,7 | 29 | 715,4 | 48 | 1.170,2 |
| 11 | 284,6 | 30 | 739,4 | 49 | 1.194,1 |
| 12 | 308,6 | 31 | 763,3 | 50 | 1.218,1 |
| 13 | 332,5 | 32 | 787,2 | | |

The showed blow-off values will be reached at an increase of pressure of 10% above the differential test pressure.

**Indication:**

Safety valves of model SVWC are only suitable for temperatures between –10 and 180°C .
Valves are adjusted and supplied leaded. Special variants (other spigot, nickel plated or similar) on request.
Delivery with knurled thumb screw is possible.
We ask for indication of the medium and the operating temperature in order
Please find safety references and the guidance of maintenance on the back sheet of our inspection certificate or on inquiry.

Changes in the sense of the technical progress reserve.

**Armaturen- und Metallwerke Zöblitz GmbH**
Bahnhofstraße 16, 09496 Marienberg Tel. 037363 480-0 / Fax 037363 480-90
Internet: www.armaturen-zoeblitz.de e-mail: info@armaturen-zoeblitz.de
TDB-8.0308.0-D_03E

page 2/2

### 13.5.2 Data Sheet 2 of 4

# Safety valves

| Type SVW/SVWN/SVWC | DN 10 | PN 50 | -25 till 180 °C | type tested CE 0036 |
|---|---|---|---|---|

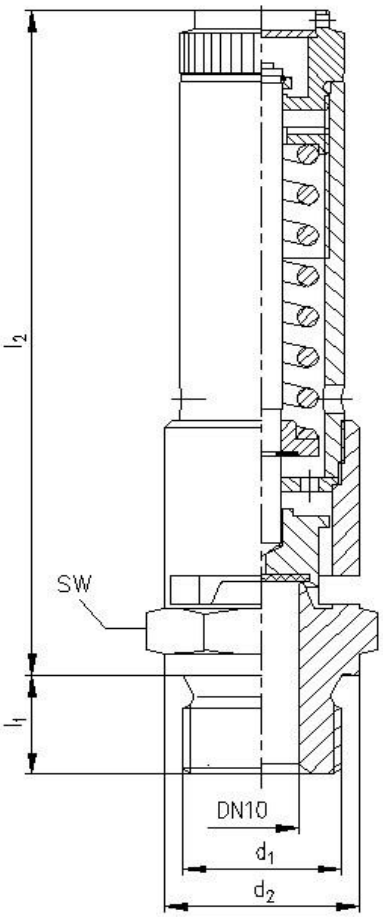


**Use area:**

- ⇨ for compressed air other gases of the fluid group 2;
- ⇨ blow-off freely,
- ⇨ therefore not suitable for fluids and steam

**Models**

SVW ⇨ 2.0401 / C38500 (brass)
SVWC ⇨ 1.4401 / A316 (stainless steel)
SVWN ⇨ 1.4571 / A316Ti (stainless steel)

**Characteristics:**

open type +++ elastic valve seat seal (Viton) +++
compression spring of stainless steel +++
ventilate with knurled thumb screw +++
connection with spigot +++ product-mark TÜV and GL +++
TÜV- and GL - individual inspection +++
certificates according to EN 10204 possible

| connection tap ($d_1$) | area of differential test pressure [bar] | $d_2$ [mm] | $l_1$ [mm] | $l_2$ [mm] | SW |
|---|---|---|---|---|---|
| G3/8 A | 0,20 - 8,50 | 22 | 12 | 75 | 27 |
| | 08,51 - 40,00 | | | 95 | |
| | 40,01 - 50,00 | | | 120 | |
| G1/2 A | 0,20 – 8,50 | 26 | 14 | 75 | |
| | 08,51 - 40,00 | | | 95 | |
| | 40,01 - 50,00 | | | 120 | |
| G3/4 A | 0,20 - 8,50 | 32 | 16 | 75 | 32 |
| | 08,51 - 40,00 | | | 95 | |
| | 40,01 - 50,00 | | | 120 | |

**Order description:**

e.g. SVW 10 – 11 bar – G 3/8 A – ...

- ... — special wishes
- G 3/8 A — spigot
- 11 bar — differential test pressure
- 10 — nominal size
- SVW — type

(Please pay attention to the indication on the back-sheet.)

Changes in the sense of the technical progress reserve.

**Armaturen- und Metallwerke Zöblitz GmbH**
Bahnhofstraße 16, 09496 Marienberg Tel. 037363 480-0 / Fax 037363 480-90
Internet: www.armaturen-zoeblitz.de e-mail: info@armaturen-zoeblitz.de



TDB-8.0313.0-D_03E

# Safety valves

| Type SVW/SVWN/SVWC | DN 10 | PN 50 | -25 till 180 °C | type tested CE 0036 |
|---|---|---|---|---|

**Blow-off value**

| $p_e$ [bar] | qm [m³/h] at 0°C/760 Torr | $p_e$ [bar] | qm [m³/h] at 0°C/760 Torr | $p_e$ [bar] | qm [m³/h] at 0°C/760 Torr |
|---|---|---|---|---|---|
| 0,2 | 24,0 | 15 | 649,2 | 34 | 1.425,3 |
| 0,8 | 59,4 | 16 | 690,0 | 35 | 1.466,2 |
| 1,3 | 76,9 | 17 | 730,8 | 36 | 1.507,0 |
| 1,8 | 94,5 | 18 | 771,7 | 37 | 1.547,8 |
| 2,3 | 112,1 | 19 | 812,6 | 38 | 1.588,7 |
| 2,8 | 129,5 | 20 | 853,4 | 39 | 1.629,5 |
| 3,3 | 147,1 | 21 | 894,3 | 40 | 1.670,4 |
| 3,8 | 164,1 | 22 | 935,1 | 41 | 1.711,3 |
| 4 | 199,8 | 23 | 975,9 | 42 | 1.752,1 |
| 5 | 240,7 | 24 | 1.016,8 | 43 | 1.792,9 |
| 6 | 281,5 | 25 | 1.057,7 | 44 | 1.833,8 |
| 7 | 322,4 | 26 | 1.098,5 | 45 | 1.874,6 |
| 8 | 363,3 | 27 | 1.139,4 | 46 | 1.919,5 |
| 9 | 404,0 | 28 | 1.180,2 | 47 | 1.956,4 |
| 10 | 444,9 | 29 | 1.221,1 | 48 | 1.997,2 |
| 11 | 485,8 | 30 | 1.261,9 | 49 | 2.038,1 |
| 12 | 526,6 | 31 | 1.302,7 | 50 | 2.078,9 |
| 13 | 567,5 | 32 | 1.343,6 | | |
| 14 | 608,3 | 33 | 1.384,5 | | |

The showed blow-off values will be reached at an increase of pressure of 10% above the differential test pressure.

**Indication:**

Valves are adjusted and supplied leaded. Special variants (other spigot, nickel-plated or similar) on request.
Delivery with jet deflection ring is possible.
We ask for indication of the medium and the operating temperature in order.
Please find safety references and the guidance of maintenance on the back sheet of our inspection certificate or on inquiry.

Changes in the sense of the technical progress reserve.

**Armaturen- und Metallwerke Zöblitz GmbH**
Bahnhofstraße 16, 09496 Marienberg Tel. 037363 480-0 / Fax 037363 480-90
Internet: www.armaturen-zoeblitz.de e-mail: info@armaturen-zoeblitz.de

### 13.5.3 Data Sheet 3 of 4

# TÜV/CE atmospheric discharge safety valves for industrial applications

## → Series 810

4.2

**810**

**Safety valves made of brass, atmospheric discharge, with threaded connections**

### SUITABLE FOR

| | |
|---|---|
| Air, gases and vapours | neutral |

### EXAMPLES OF USE

For the protection of:
- pressure tanks and
- pressure systems

for air and other neutral, non-poisonous and non-flammable gases which can be freely discharged into the environment.
Please observe plant-specific regulations and use of appropriate valve version and sealing material.

- compressors
- pressure booster plants air-side
- paint spray shops
- pneumatic control units
- transport- and railway applications

**Safety valves are set and sealed at the factory.**

### MATERIAL

### SPECIFICATION

1/4" – 1"

– 60°C to + 270°C
depending on version

0,2 – 50 bar

### APPROVALS

| | |
|---|---|
| **TÜV Type test approval 2055** | **D/G** |
| **ASME** | **G** |
| **EC type examination** | **S/G** |
| **TSG ZF001-2006** | **D/G (S/G)** |
| **KGS** | **G** |
| **TR ZU 032/2013 - TR ZU 010/2011** | **D/G (S/G)** |
| **Type approval Deutsche Bahn** | |
| **Requirements** | |
| AD 2000 Data sheet A2 | ASME-Code Sec. VIII Div. 1 |
| DIN EN ISO 4126-1 | KGS AA 319 |
| PED 2014/68/EU | |
| **Classification society** | |
| Germanischer Lloyd | GL |
| Lloyd's Register EMEA | LR EMEA |
| Bureau Veritas | BV |
| American Bureau of Shipping | ABS |
| Det Norske Veritas | DNV |
| Russian Maritime Register of Shipping | RS |

### MATERIALS

| Component | Material | DIN EN | ASME |
|---|---|---|---|
| Inlet body | Brass | CW617N | CW617N |
| Outlet body | Brass | CW617N | CW617N |
| Internal parts | Brass | CW617N | CW617N |
| Spring | Stainless steel | 1.4568 | 631 |

Series 810 ■ VALVE VERSION

| | | |
|---|---|---|
| s | Standard | cylindrical form, atmospheric discharge, for air and similar neutral, non-toxic and non-flammable gases that can be freely discharged into the atmosphere. |

■ MEDIUM

| | | |
|---|---|---|
| G | gaseous | Air and similar neutral gases |

■ TYPE OF LIFTING MECHANISM

| | |
|---|---|
| K | Standard with twist-type lifting mechanism |

■ AVAILABLE NOMINAL DIAMETERS AND CONNECTION SIZES

| Nominal diameter DN | 8 | 10 | 15 | 20 | 25 |
|---|---|---|---|---|---|
| Inlet | 1/4" (8) | 3/8" (10) | 1/2" (15) | 3/4" (20) | 1" (25) |
| Atmospheric discharge via outlet apertures | ■ | ■ | ■ | ■ | ■ |

■ TYPE OF CONNECTION INLET / OUTLET THREADED CONNECTIONS

| | | | |
|---|---|---|---|
| m / – | Standard | Male thread BSP-P / – | DIN EN ISO 228-1 / – |
| **Against surcharge** | | | |
| BSP-Tm / – | On request | Male thread BSP-T / – | DIN EN 10226, ISO 7-1 / – |
| NPT-m / – | On request | Male thread NPT-m / – | ANSI B1.20.1 / – |

■ SEALS

| | | | |
|---|---|---|---|
| FKM | Fluorocarbon | Elastomere flat seal 0,2 – 25 bar | –20°C to +200°C |
| FKM VI | Fluorocarbon | Elastomere flat seal | –46°C up to +230°C<br>in case of blowing of up to +270°C |
| PTFE | Polytetrafluoroethylene | Flat seal 25,1 – 50 bar | –60°C to +225°C |
| **Against surcharge** | | | |
| PTFE | Polytetrafluoroethylene | Flat seal 0,2 – 25 bar | –60°C to +225°C |

■ OPTIONS

Special versions on request.

## NOMINAL DIAMETERS, CONNECTIONS, INSTALLATION DIMENSIONS

| Series 810: Connection, installation dimensions, ranges of adjustment | | | | | | | | | |
|---|---|---|---|---|---|---|---|---|---|
| Nominal diameter | DN | 8 | 10 | | 15 | | 20 | | 25 |
| Connection DIN EN ISO 228 | G | 1/4" (8) | 3/8" (10) | | 1/2" (15) | | 3/4" (20) | | 1" (25) |
| Installation dimensions in mm | H | 60 | 65 | 78 | 66 | 79 | 94 | 104 | 111 |
| | h | 10 | 10 | 10 | 12 | 12 | 12 | 12 | 14 |
| | SW | 19 | 24 | 24 | 27 | 27 | 34 | 34 | 41 |
| | do | 7,5 | 10 | 10 | 11 | 11 | 16 | 16 | 20 |
| Weight | kg | 0,1 | 0,14 | 0,16 | 0,17 | 0,19 | 0,35 | 0,4 | 0,6 |
| Range of adjustment | bar | 0,2-50 | 0,2-9 | 9,1-50 | 0,2-7 | 7,1-50 | 0,2-9 | 9,1-50 | 0,2-50 |
| Range of adjustment ASME | psi | 15-725 | 15-130 | 131-725 | 15-102 | 103-725 | 15-130 | 131-725 | 15-725 |

## MAIN DIMENSIONS, INSTALLATION DIMENSIONS

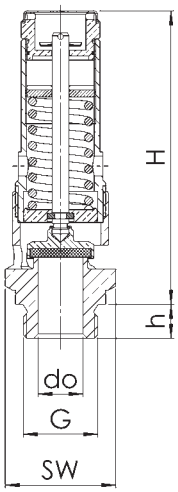


## INDIVIDUAL SELECTION / VALVE CONFIGURATION

| Series | Valve version | Medium | Lifting device | Nominal diameter DN | Connection type | | Connection size | | Seal | Options | Set pressure | Quantity |
|---|---|---|---|---|---|---|---|---|---|---|---|---|
| | | | | | Inlet | Outlet | Inlet | Outlet | | | | |
| 810 | s | G | K | *10* | *m* | – | *10* | – | *FKM* | | *11,5* | *50* |
| 810 | s | G | K | | | – | | – | | | | |
| 810 | s | G | K | | | – | | – | | | | |
| 810 | s | G | K | | | – | | – | | | | |

In this table you can configure a valve according to your individual requirements (similar to the *example* shown, which should be deleted before you enter your own data). Please complete the table by hand using the abbreviations in this datasheet and then fax it to: +49(0)7141.4889488
Please do not forget to add your personal data so that our sales team can contact you.

Name _____

First Name _____

Company _____

Telephone _____

E-Mail _____

■ CAPACITY TABLE

| Series 810: Blowing-off rates at 10% above set pressure | | | | | | |
|---|---|---|---|---|---|---|
| | Nominal diameter DN | 8 | 10 | 15 | 20 | 25 |
| | Set pressure bar | | | | | |
| | 0,2 | 20 | 35 | 46 | 100 | 133 |
| Air | 0,3 | 25 | 45 | 54 | 119 | 144 |
| Nm³/h | 0,4 | 29 | 52 | 67 | 137 | 167 |
| | 0,5 | 32 | 58 | 74 | 158 | 185 |
| | 0,6 | 35 | 64 | 82 | 172 | 211 |
| | 0,7 | 37 | 70 | 87 | 187 | 235 |
| | 0,8 | 41 | 74 | 95 | 200 | 260 |
| | 0,9 | 43 | 80 | 101 | 213 | 282 |
| | 1 | 46 | 85 | 107 | 227 | 305 |
| | 1,5 | 60 | 108 | 137 | 286 | 408 |
| | 2 | 73 | 132 | 166 | 346 | 506 |
| | 3 | 100 | 182 | 222 | 465 | 699 |
| | 4 | 125 | 228 | 279 | 584 | 889 |
| | 5 | 151 | 274 | 336 | 703 | 1070 |
| | 6 | 176 | 321 | 393 | 821 | 1251 |
| | 7 | 201 | 367 | 450 | 940 | 1432 |
| | 8 | 227 | 414 | 507 | 1059 | 1613 |
| | 9 | 252 | 460 | 564 | 1178 | 1794 |
| | 10 | 278 | 507 | 621 | 1297 | 1975 |
| | 11 | 303 | 553 | 678 | 1416 | 2156 |
| | 12 | 329 | 599 | 735 | 1535 | 2337 |
| | 13 | 354 | 646 | 791 | 1654 | 2518 |
| | 14 | 380 | 692 | 848 | 1773 | 2700 |
| | 15 | 405 | 739 | 905 | 1891 | 2881 |
| | 16 | 431 | 785 | 962 | 2010 | 3062 |
| | 17 | 456 | 832 | 1019 | 2129 | 3243 |
| | 18 | 482 | 878 | 1076 | 2248 | 3424 |
| | 19 | 507 | 925 | 1133 | 2367 | 3605 |
| | 20 | 533 | 971 | 1190 | 2486 | 3786 |
| | 21 | 558 | 1017 | 1247 | 2605 | 3967 |
| | 22 | 584 | 1064 | 1304 | 2724 | 4148 |
| | 23 | 609 | 1110 | 1361 | 2843 | 4329 |
| | 24 | 635 | 1157 | 1417 | 2961 | 4510 |
| | 25 | 660 | 1203 | 1474 | 3080 | 4691 |
| | 26 | 685 | 1250 | 1531 | 3199 | 4872 |
| | 27 | 711 | 1296 | 1588 | 3318 | 5053 |
| | 28 | 736 | 1342 | 1645 | 3437 | 5234 |
| | 29 | 762 | 1389 | 1702 | 3556 | 5415 |
| | 30 | 787 | 1435 | 1759 | 3675 | 5597 |
| | 31 | 813 | 1482 | 1816 | 3794 | 5778 |
| | 32 | 838 | 1528 | 1873 | 3913 | 5959 |
| | 33 | 864 | 1575 | 1930 | 4031 | 6140 |
| | 34 | 889 | 1621 | 1986 | 4150 | 6321 |
| | 35 | 915 | 1667 | 2043 | 4269 | 6502 |
| | 36 | 940 | 1714 | 2100 | 4388 | 6683 |
| | 37 | 966 | 1760 | 2157 | 4507 | 6864 |
| | 38 | 991 | 1807 | 2214 | 4626 | 7045 |
| | 39 | 1017 | 1853 | 2271 | 4745 | 7226 |
| | 40 | 1042 | 1900 | 2328 | 4864 | 7407 |
| | 41 | 1068 | 1946 | 2385 | 4983 | 7588 |
| | 42 | 1093 | 1993 | 2442 | 5101 | 7769 |
| | 43 | 1119 | 2039 | 2499 | 5220 | 7950 |
| | 44 | 1144 | 2085 | 2556 | 5339 | 8131 |
| | 45 | 1170 | 2132 | 2612 | 5458 | 8313 |
| | 46 | 1195 | 2178 | 2669 | 5577 | 8494 |
| | 47 | 1220 | 2225 | 2726 | 5696 | 8675 |
| | 48 | 1246 | 2271 | 2783 | 5815 | 8856 |
| | 49 | 1271 | 2318 | 2840 | 5934 | 9037 |
| | 50 | 1297 | 2364 | 2897 | 6053 | 9218 |

■ CAPACITY TABLE ASME

| Series 810: Blowing-off rates at 10% above set pressure | | | | | | |
|---|---|---|---|---|---|---|
| | Nominal diameter DN | 8 | 10 | 15 | 20 | 25 |
| | Set pressure bar psi(g) | | | | | |
| | 15 | 31 | 55 | 67 | 142 | 221 |
| Air | 30 | 45 | 81 | 98 | 207 | 323 |
| SCFM | 40 | 56 | 99 | 120 | 254 | 397 |
| | 50 | 66 | 118 | 143 | 302 | 472 |
| | 60 | 77 | 137 | 165 | 350 | 546 |
| | 70 | 87 | 155 | 188 | 397 | 621 |
| | 87 | 105 | 187 | 226 | 478 | 747 |
| | 90 | 108 | 192 | 233 | 493 | 770 |
| | 100 | 119 | 211 | 255 | 540 | 844 |
| | 110 | 129 | 230 | 278 | 588 | 919 |
| | 120 | 140 | 248 | 300 | 636 | 993 |
| | 130 | 150 | 267 | 323 | 683 | 1068 |
| | 140 | 161 | 286 | 345 | 731 | 1142 |
| | 150 | 171 | 304 | 368 | 779 | 1217 |
| | 160 | 182 | 323 | 391 | 826 | 1291 |
| | 170 | 192 | 341 | 413 | 874 | 1366 |
| | 180 | 203 | 360 | 436 | 922 | 1440 |
| | 190 | 213 | 379 | 458 | 969 | 1515 |
| | 200 | 223 | 397 | 481 | 1017 | 1589 |
| | 210 | 234 | 416 | 503 | 1065 | 1663 |
| | 220 | 244 | 434 | 526 | 1112 | 1738 |
| | 230 | 255 | 453 | 548 | 1160 | 1812 |
| | 240 | 265 | 472 | 571 | 1208 | 1887 |
| | 250 | 276 | 490 | 593 | 1255 | 1961 |
| | 260 | 286 | 509 | 616 | 1303 | 2036 |
| | 270 | 297 | 528 | 638 | 1351 | 2110 |
| | 280 | 307 | 546 | 661 | 1398 | 2185 |
| | 290 | 318 | 565 | 683 | 1446 | 2259 |
| | 300 | 328 | 583 | 706 | 1494 | 2334 |
| | 320 | 349 | 621 | 751 | 1589 | 2483 |
| | 340 | 370 | 658 | 796 | 1684 | 2632 |
| | 360 | 391 | 695 | 841 | 1780 | 2781 |
| | 380 | 412 | 732 | 886 | 1875 | 2929 |
| | 400 | 433 | 770 | 931 | 1970 | 3078 |
| | 420 | 454 | 807 | 976 | 2066 | 3227 |
| | 440 | 475 | 844 | 1021 | 2161 | 3376 |
| | 460 | 496 | 881 | 1066 | 2256 | 3525 |
| | 480 | 517 | 919 | 1111 | 2351 | 3674 |
| | 500 | 538 | 956 | 1157 | 2447 | 3823 |
| | 520 | 559 | 993 | 1202 | 2542 | 3972 |
| | 540 | 580 | 1030 | 1247 | 2637 | 4121 |
| | 560 | 600 | 1067 | 1292 | 2733 | 4270 |
| | 580 | 621 | 1105 | 1337 | 2828 | 4419 |
| | 600 | 642 | 1142 | 1382 | 2923 | 4568 |
| | 620 | 663 | 1179 | 1427 | 3019 | 4717 |
| | 640 | 684 | 1216 | 1472 | 3114 | 4866 |
| | 660 | 705 | 1254 | 1517 | 3209 | 5015 |
| | 680 | 726 | 1291 | 1562 | 3305 | 5164 |
| | 700 | 747 | 1328 | 1607 | 3400 | 5313 |
| | 725 | 773 | 1375 | 1663 | 3519 | 5499 |

### 13.5.4 Data Sheet 4 of 4

# TÜV/CE atmospheric discharge safety valves for industrial applications

4.4

812

Safety valves made of brass, atmospheric discharge, with threaded connections

## → Series 812

UV

■ MATERIAL

■ SPECIFICATION

1/2" – 2"

– 60°C to + 270°C
depending on version

0,2 – 50 bar
depending on version

■ SUITABLE FOR

Air, gases and vapours neutral

■ EXAMPLES OF USE

For the protection of:
- pressure tanks and
- pressure systems

for air and other neutral, non-poisonous and non-flammable gases which can be freely discharged into the environment.
Please observe plant-specific regulations and use of appropriate valve version and sealing material.

- pneumatic control units
- pressure booster plants air-side
- paint spray shops
- transport- and railway applications
- pneumatic braking systems

**Safety valves are set and sealed at the factory.**

■ APPROVALS

| | |
|---|---|
| **TÜV Type test approval 2003** | **D/G** |
| **ASME** | **G** |
| **EC type examination** | **S/G** |
| **TSG ZF001-2006** | **D/G (S/G)** |
| **KGS** | **G** |
| **TR ZU 032/2013 - TR ZU 010/2011** | **D/G (S/G)** |
| **Type approval Deutsche Bahn** | |
| **Requirements** | |
| AD 2000 Data sheet A2 | ASME-Code Sec. VIII Div. 1 |
| DIN EN ISO 4126-1 | KGS AA 319 |
| PED 2014/68/EU | |
| **Classification society** | |
| Germanischer Lloyd | GL |
| Lloyd's Register EMEA | LR EMEA |
| American Bureau of Shipping | ABS |
| Det Norske Veritas | DNV |
| Bureau Veritas | BV |
| Russian Maritime Register of Shipping | RS |

■ MATERIALS

| Component | Material | DIN EN | ASME |
|---|---|---|---|
| Inlet body | Brass | CW617N | CW617N |
| Outlet body | Brass | CW617N | CW617N |
| Internal parts | Brass / Stainless steel | CW617N / 1.4404 | CW617N / 316 L |
| Spring | Stainless steel | 1.4310 / 1.4568 | 302 / 631 |
| Sealing cap | Stainless steel | 1.4301 | 304 |

GOETZE ARMATUREN

TDB-8.5061.0-DAT_01E
Version 2017 / 08 (K)

www.goetze-armaturen.de | info@goetze-armaturen.de | Phone: +49(0)7141.48894-60

Series 812 ■ VALVE VERSION

| | | |
|---|---|---|
| **s** | Standard | cylindrical form, atmospheric discharge, for air and similar neutral, non-toxic and non-flammable gases that can be freely discharged into the atmosphere. |

■ MEDIUM

| | | |
|---|---|---|
| **G** | gaseous | Air and similar neutral gases |

■ TYPE OF LIFTING MECHANISM

| | |
|---|---|
| **K** | Standard with twist-type lifting mechanism |

■ AVAILABLE NOMINAL DIAMETERS AND CONNECTION SIZES

| **Nominal diameter DN** | **15** | **20** | **25** | **32** | **40** | **50** |
|---|---|---|---|---|---|---|
| **Inlet** | 1/2" (15) | 3/4" (20) | 1" (25) | 1 1/4" (32) | 1 1/2" (40) | 2" (50) |
| Atmospheric discharge via outlet apertures | ■ | ■ | ■ | ■ | ■ | ■ |

■ TYPE OF CONNECTION INLET / OUTLET THREADED CONNECTIONS

| | | | |
|---|---|---|---|
| **m / –** | Standard | Male thread BSP-P / – | DIN EN ISO 228-1 / – |
| **Against surcharge** | | | |
| **BSP-Tm / –** | | Male thread BSP-T | DIN EN 10226, ISO 7-1 / – |
| **NPT-m / –** | | Male thread NPT / – | ANSI B1.20.1 / – |
| **Further connection types available on request** | | | |

■ SEALS

| | | | |
|---|---|---|---|
| **NBR** | Nitrile rubber | Elastomere flat seal | –30°C to +130°C |
| **Against surcharge** | | | |
| **FKM** | Fluorocarbon | Elastomere flat seal | –20°C to +200°C |
| **FKM VI** | Fluorocarbon | Elastomere flat seal | –46°C up to +270°C<br>after the seal has been subjected to temperatures of more than +230°C slight leakages are possible |
| **PTFE** | Polytetrafluoroethylene | Flat seal from 1 bar | –60°C to +225°C |
| **EPDM** | Ethylene propylene diene | Elastomere flat seal | –40°C to +170°C |

■ OPTIONS

| | |
|---|---|
| **SHORT** | short version for DN 32 and DN 40 |
| **Against surcharge** | |
| Deflector made of stainless steel | Order code: **812 ABS-DN..** |
| Special versions on request. | |

## NOMINAL DIAMETERS, CONNECTIONS, INSTALLATION DIMENSIONS

| Series 812: Connection, installation dimensions, ranges of adjustment | | | | | | | |
|---|---|---|---|---|---|---|---|
| Nominal diameter | DN | 15 | 20 | 25 | 32 | 40 | 50 |
| Connection DIN EN ISO 228 | G | 1/2" (15) | 3/4" (20) | 1" (25) | 1 1/4" (32) | 1 1/2" (40) | 2" (50) |
| Installation dimensions in mm | H (H1) | 144 | 177 | 177 | 215 (177[1]) | 215 (177[1]) | 282 |
| | h | 12 | 15 | 15 | 22,5 | 22,5 | 26 |
| | SW | 32 | 41 | 41 | 55 | 55 | 80 |
| | do | 14 | 20 | 24 | 31 | 31 | 48 |
| Weight | kg | 0,6 | 1,3 | 1,3 | 2,6 | 2,6 | 5,4 |
| Range of adjustment | bar | 0,2-50 | 0,2-50 | 0,2-50 | 0,2-50 | 0,2-50 | 0,2-30 |
| Range of adjustment ASME | psi | 15-725 | 15-725 | 15-725 | 15-725 | 15-725 | 15-435 |

[1]type 812 with the option SHORT for the pressure range 0,2 to 6 bar also available as short version

## MAIN DIMENSIONS, INSTALLATION DIMENSIONS

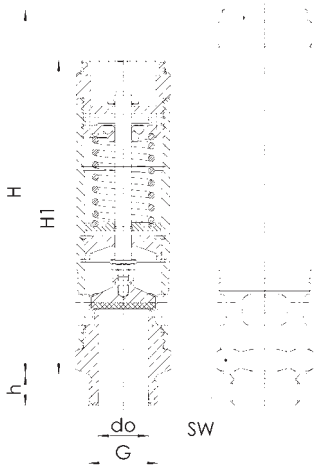


## INDIVIDUAL SELECTION / VALVE CONFIGURATION

| Series | Valve version | Medium | Lifting device | Nominal diameter DN | Connection type | | Connection size | | Seal | Options | Set pressure | Quantity |
|---|---|---|---|---|---|---|---|---|---|---|---|---|
| | | | | | Inlet | Outlet | Inlet | Outlet | | | | |
| 812 | s | G | K | *40* | *m* | – | *40* | – | *FKM* | | *5,0* | *3* |
| 812 | s | G | K | *32* | *m* | – | *32* | – | *NBR* | *SHORT* | *3,5* | *2* |
| 812 | s | G | K | | | – | | – | | | | |
| 812 | s | G | K | | | – | | – | | | | |

In this table you can configure a valve according to your individual requirements (similar to the *example* shown, which should be deleted before you enter your own data). Please complete the table by hand using the abbreviations in this datasheet and then fax it to: +49(0)7141.4889488
Please do not forget to add your personal data so that our sales team can contact you.

Name

First Name

Company

Telephone

E-Mail

■ CAPACITY TABLE

| Series 812: Blowing-off rates at 10% above set pressure | | | | | | | |
|---|---|---|---|---|---|---|---|
| | Nominal diameter DN | 15 | 20 | 25 | 32 | 40 | 50 |
| | Set pressure bar | | | | | | |
| | 0,2 | 61 | 167 | 240 | 401 | 401 | 768 |
| Air | 0,3 | 76 | 189 | 272 | 453 | 453 | 827 |
| Nm³/h | 0,4 | 88 | 205 | 296 | 493 | 493 | 887 |
| | 0,5 | 99 | 222 | 320 | 534 | 534 | 946 |
| | 0,6 | 110 | 240 | 345 | 576 | 576 | 1005 |
| | 0,7 | 121 | 262 | 377 | 629 | 629 | 1064 |
| | 0,8 | 129 | 280 | 404 | 673 | 673 | 1123 |
| | 0,9 | 138 | 299 | 431 | 719 | 719 | 1182 |
| | 1 | 147 | 319 | 459 | 766 | 766 | 1370 |
| | 1,5 | 194 | 419 | 604 | 1007 | 1007 | 1827 |
| | 2 | 245 | 520 | 749 | 1249 | 1249 | 2325 |
| | 3 | 338 | 717 | 1032 | 1723 | 1723 | 3177 |
| | 4 | 436 | 923 | 1330 | 2219 | 2219 | 4056 |
| | 5 | 524 | 1112 | 1601 | 2671 | 2671 | 4962 |
| | 6 | 613 | 1300 | 1872 | 3123 | 3123 | 5802 |
| | 7 | 702 | 1488 | 2143 | 3575 | 3575 | 6642 |
| | 8 | 790 | 1676 | 2413 | 4027 | 4027 | 6034 |
| | 9 | 879 | 1864 | 2684 | 4478 | 4478 | 6711 |
| | 10 | 968 | 2052 | 2955 | 4930 | 4930 | 7388 |
| | 11 | 1057 | 2240 | 3226 | 5382 | 5382 | 8065 |
| | 12 | 1145 | 2428 | 3497 | 5834 | 5834 | 8742 |
| | 13 | 1234 | 2617 | 3768 | 6286 | 6286 | 9420 |
| | 14 | 1323 | 2805 | 4039 | 6738 | 6738 | 10097 |
| | 15 | 1412 | 2993 | 4310 | 7190 | 7190 | 10774 |
| | 16 | 1500 | 3181 | 4581 | 7642 | 7642 | 11451 |
| | 17 | 1589 | 3369 | 4851 | 8094 | 8094 | 12129 |
| | 18 | 1678 | 3557 | 5122 | 8546 | 8546 | 12806 |
| | 19 | 1766 | 3745 | 5393 | 8998 | 8998 | 13483 |
| | 20 | 1855 | 3933 | 5664 | 9450 | 9450 | 14160 |
| | 21 | 1944 | 4122 | 5935 | 9902 | 9902 | 14838 |
| | 22 | 2033 | 4310 | 6206 | 10354 | 10354 | 15515 |
| | 23 | 2121 | 4498 | 6477 | 10806 | 10806 | 16192 |
| | 24 | 2210 | 4686 | 6748 | 11258 | 11258 | 16869 |
| | 25 | 2299 | 4874 | 7019 | 11710 | 11710 | 17546 |
| | 26 | 2387 | 5062 | 7289 | 12162 | 12162 | 18224 |
| | 27 | 2476 | 5250 | 7560 | 12614 | 12614 | 18901 |
| | 28 | 2565 | 5438 | 7831 | 13066 | 13066 | 19578 |
| | 29 | 2654 | 5626 | 8102 | 13518 | 13518 | 20255 |
| | 30 | 2742 | 5815 | 8373 | 13970 | 13970 | 20933 |
| | 31 | 2831 | 6003 | 8644 | 14422 | 14422 | - |
| | 32 | 2920 | 6191 | 8915 | 14874 | 14874 | - |
| | 33 | 3009 | 6379 | 9186 | 15325 | 15325 | - |
| | 34 | 3097 | 6567 | 9457 | 15777 | 15777 | - |
| | 35 | 3186 | 6755 | 9727 | 16229 | 16229 | - |
| | 36 | 3275 | 6943 | 9998 | 16681 | 16681 | - |
| | 37 | 3363 | 7131 | 10269 | 17133 | 17133 | - |
| | 38 | 3452 | 7320 | 10540 | 17585 | 17585 | - |
| | 39 | 3541 | 7508 | 10811 | 18037 | 18037 | - |
| | 40 | 3630 | 7696 | 11082 | 18489 | 18489 | - |
| | 41 | 3718 | 7884 | 11353 | 18941 | 18941 | - |
| | 42 | 3807 | 8072 | 11624 | 19393 | 19393 | - |
| | 43 | 3896 | 8260 | 11895 | 19845 | 19845 | - |
| | 44 | 3984 | 8448 | 12166 | 20297 | 20297 | - |
| | 45 | 4073 | 8636 | 12436 | 20749 | 20749 | - |
| | 46 | 4162 | 8825 | 12707 | 21201 | 21201 | - |
| | 47 | 4251 | 9013 | 12978 | 21653 | 21653 | - |
| | 48 | 4339 | 9201 | 13249 | 22105 | 22105 | - |
| | 49 | 4428 | 9389 | 13520 | 22557 | 22557 | - |
| | 50 | 4517 | 9577 | 13791 | 23009 | 23009 | - |

■ CAPACITY TABLE ASME

Series 812: Blowing-off rates at 10% above set pressure

| | Nominal diameter DN | 15 | 20 | 25 | 32 | 40 | 50 |
|---|---|---|---|---|---|---|---|
| | Set pressure psi(g) | | | | | | |
| | 15 | 111 | 226 | 326 | 543 | 543 | 985 |
| Air | 30 | 162 | 330 | 475 | 792 | 792 | 1437 |
| SCFM | 40 | 199 | 406 | 584 | 975 | 975 | 1768 |
| | 50 | 236 | 482 | 694 | 1158 | 1158 | 2099 |
| | 60 | 273 | 558 | 803 | 1340 | 1340 | 2430 |
| | 70 | 311 | 634 | 913 | 1523 | 1523 | 2762 |
| | 87 | 374 | 763 | 1099 | 1834 | 1834 | 3325 |
| | 90 | 385 | 786 | 1132 | 1888 | 1888 | 3424 |
| | 100 | 422 | 862 | 1241 | 2071 | 2071 | 3755 |
| | 110 | 460 | 938 | 1351 | 2254 | 2254 | 4087 |
| | 120 | 497 | 1014 | 1460 | 2437 | 2437 | 4418 |
| | 130 | 534 | 1090 | 1570 | 2619 | 2619 | 4749 |
| | 140 | 571 | 1166 | 1679 | 2802 | 2802 | 5081 |
| | 150 | 609 | 1242 | 1789 | 2985 | 2985 | 5412 |
| | 160 | 646 | 1318 | 1898 | 3167 | 3167 | 5743 |
| | 170 | 683 | 1394 | 2008 | 3350 | 3350 | 6074 |
| | 180 | 721 | 1470 | 2117 | 3533 | 3533 | 6406 |
| | 190 | 758 | 1546 | 2227 | 3715 | 3715 | 6737 |
| | 200 | 795 | 1623 | 2336 | 3898 | 3898 | 7068 |
| | 210 | 832 | 1699 | 2446 | 4081 | 4081 | 7400 |
| | 220 | 870 | 1775 | 2555 | 4263 | 4263 | 7731 |
| | 230 | 907 | 1851 | 2665 | 4446 | 4446 | 8062 |
| | 240 | 944 | 1927 | 2774 | 4629 | 4629 | 8393 |
| | 250 | 981 | 2003 | 2884 | 4812 | 4812 | 8725 |
| | 260 | 1019 | 2079 | 2993 | 4994 | 4994 | 9056 |
| | 270 | 1056 | 2155 | 3103 | 5177 | 5177 | 9387 |
| | 280 | 1093 | 2231 | 3212 | 5360 | 5360 | 9718 |
| | 290 | 1130 | 2307 | 3322 | 5542 | 5542 | 10050 |
| | 300 | 1168 | 2383 | 3431 | 5725 | 5725 | 10381 |
| | 320 | 1242 | 2535 | 3650 | 6090 | 6090 | 11044 |
| | 340 | 1317 | 2687 | 3869 | 6456 | 6456 | 11706 |
| | 360 | 1391 | 2839 | 4088 | 6821 | 6821 | 12369 |
| | 380 | 1466 | 2991 | 4307 | 7187 | 7187 | 13031 |
| | 400 | 1540 | 3143 | 4527 | 7552 | 7552 | 13694 |
| | 420 | 1615 | 3295 | 4746 | 7917 | 7917 | 14356 |
| | 435 | 1671 | 3410 | 4910 | 8191 | 8191 | 14853 |
| | 460 | 1764 | 3600 | 5184 | 8648 | 8648 | - |
| | 480 | 1838 | 3752 | 5403 | 9014 | 9014 | - |
| | 500 | 1913 | 3904 | 5622 | 9379 | 9379 | - |
| | 550 | 2099 | 4284 | 6169 | 10292 | 10292 | - |
| | 600 | 2286 | 4664 | 6717 | 11206 | 11206 | - |
| | 650 | 2472 | 5045 | 7264 | 12119 | 12119 | - |
| | 700 | 2658 | 5425 | 7812 | 13033 | 13033 | - |
| | 725 | 2751 | 5615 | 8085 | 13490 | 13490 | - |

## 13.6 Condensate drain – operating instructions

EN-US - english US

# Instructions for installation and operation

## Condensate drain

## ECO-DRAIN 31

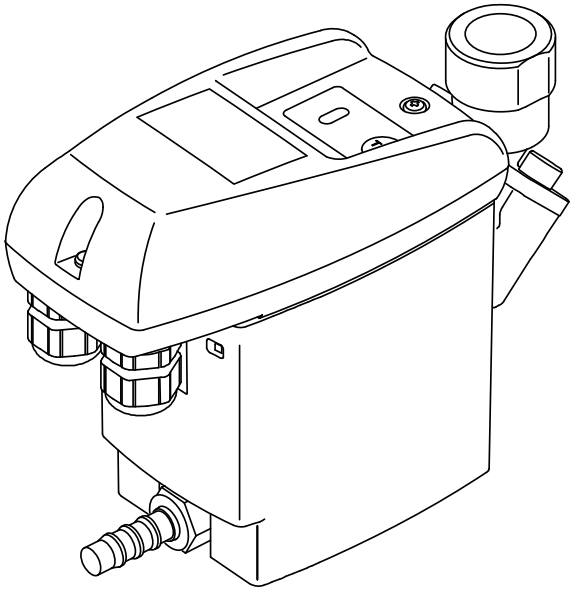

01-2336

ECO-DRAIN31 07 USE

Dear customer,

Thank you for deciding in favor of the ECO-DRAIN 31 condensate drain. Please read the installation and operating instructions carefully before mounting and starting up the ECO-DRAIN 31, and follow our directions. Perfect functioning of the ECO-DRAIN 31, and thus reliable condensate discharge, can only be guaranteed when the provisions and notes stipulated here are strictly adhered to.

1 Pictograms and symbols ..... 4
2 Safety instructions ..... 4
3 Proper use ..... 6
4 Exclusion from the scope of application ..... 6
5 Technical data ..... 7
6 Electrical data ..... 8
7 Dimension drawing ..... 9
8 Function ..... 10
9 Installation ..... 13
10 Electrical installation ..... 16
11 Inspection and maintenance ..... 20
12 Troubleshooting and fault elimination ..... 23
13 Elements and components ..... 24
14 Recommended spare parts ..... 25

## Pictograms and symbols

### 1 Pictograms and symbols

Observe the installation and operating instructions

Observe the installation and operating instructions (on the type plate)

General danger symbol (danger, warning, caution)

General danger symbol (danger, warning, caution) for supply voltage and supply voltage-carrying plants components

### 2 Safety instructions

**Please check whether or not these instructions correspond to the device type.**

Adhere to all advice given in these operating instructions. They include essential information which must be observed during the installation, operation and maintenance. Therefore, it is imperative for the service technician and the responsible operator / technical staff to read these operating instructions prior to installation, start-up and maintenance.

The operating instructions must be accessible at any time at the place of application of the ECO-DRAIN 31 .

In addition to these operating instructions, local or national regulations must be complied with, if necessary.

Make sure that the ECO-DRAIN 31 is operated only within the permissible limit values indicated on the type plate. Any deviation involves a risk for persons and materials, and may result in malfunction and service failures.

If you have any queries regarding these installation- and operating instructions, please contact KAESER.

**Danger!**

**Compressed air!**

**Risk of serious injury or death through contact with quickly or suddenly escaping compressed air or through bursting plant components or plant components which are not secured.**

**Measures:**

- Do not exceed the maximum operating pressure (see type plate).
- **Only carry out service measures when the system is pressure less.**
- Use pressure-resistant installation material only.
- The feed pipe must be tubed firmly. Discharge pipe: short, fixed pressure hose onto pressure-resistant pipe.
- Make sure that persons or objects cannot be hit by condensate or escaping compressed air.

## Safety instructions

**Danger!**

**Supply voltage!**

**There is the risk of an electric shock involving injury or death when coming into contact with non-insulated components carrying supply voltage.**

**Measures:**

- During electric installations, all regulations in force need to be adhered to (e.g. VDE 0100 / IEC 60364).
- **When the control unit is open, service and installation works must only be undertaken when the system is deactivated.**
- **The removed control unit has no IP degree of protection.**
- All types of electrical works must be carried out by authorized and qualified personnel only.

**Further safety instructions:**

- For installation and operation, the national regulations and safety codes in force must also be adhered to.
- Do not use the ECO-DRAIN 31 in hazardous areas.
- Regarding the inlet screw joints, excessive tightening forces must be avoided. This applies in particular to conical screw joints.
- The ECO-DRAIN 31 will only function when voltage is applied.
- Do not use the test button for permanent drainage.
- Use genuine spare parts only. This is imperative to ensure perfect functioning.

**Additional advice:**

- The removed control unit has **no IP degree of protection**.
- During installation, use spanner flat at the feed pipe (wrench size SW27) as a back rest.
- The service unit must not be dismantled.

**Caution!**

**Malfunction during operation!**

**Through incorrect installation and poor maintenance, malfunction may occur at the ECO-DRAIN.**

**Condensate which is not discharged may cause damage to plants and in production processes.**

**Measures:**

- Condensate drainage which is reliable in performance directly optimizes the compressed-air quality.
- To prevent damage and breakdowns, it is imperative to observe the following:
  - Exact compliance with the specifications of use and with the performance parameters of the ECO-DRAIN, in connection with the case of application (see "Proper use" section)
  - Exact compliance with the installation- and operation instructions in this manual
  - Regular maintenance and control of the ECO-DRAIN in accordance with the instructions in this operating manual

## Proper use

### 3 Proper use

- The ECO-DRAIN 31 is an electronically level-controlled condensate drain for compressed-air plants.
- The device is employed within the permissible performance parameters (see "Technical data").
- The ECO-DRAIN 31 is able to drain condensate under operating pressure from the plant components virtually without compressed-air loss.
- For its function, the ECO-DRAIN 31 requires an supply voltage and an operating pressure (see "Technical data").
- As far as the employment in plants with increased demands on compressed air is concerned (food industry, medical technology, laboratory equipment, special processes etc.), the operator must decide on measures for the monitoring of the compressed-air quality. These have an effect on the safety of the subsequent processes and may prevent damage to persons and plants.
- It is the task of the operator to ensure that the indicated conditions are met during the entire operating time.

### 4 Exclusion from the scope of application

- The ECO-DRAIN 31 as a condensate drain **alone cannot** guarantee a defined compressed-air quality, for this purpose, other additional technical devices are required.
- ECO-DRAIN 31 is **not** suitable for use in plants carrying vacuum or atmospheric ambient pressure or in ex-areas.
- The ECO-DRAIN 31 must not be exposed to permanent direct solar or thermal radiation.
- The ECO-DRAIN 31 must not be installed and operated in areas with an aggressive atmosphere.
- The ECO-DRAIN 31 is not heatable and, therefore, not suitable for the use in areas where frost is likely to occur.
- The ECO-DRAIN 31 is not suitable for $CO_2$ plants.

## 5 Technical data

| | |
|---|---|
| min./max. operating pressure (see type plate) | 0,8...16 bar (12...230 psi)<br>or<br>1,2...16 bar (17...230 psi) |
| min./max. temperature (see type plate) | +1...+60 °C (+34...+140 °F)<br>or<br>+1...+70 °C (+34...+158 °F) |
| Condensate inflow | NPT ½ (G ½) internal<br>max. screw-in depth 13,5 mm (½") |
| Condensate outflow | G ¼ Ø 8 ... 10 mm hose connector |
| Condensate | oil-contaminated + oil-free |
| Housing | aluminium + plastic, glass fibre-reinforced |
| Weight (empty) | 1.0 kg (2.2 lbs) |

This product has been tested to the requirements of CAN/CSA-C22.2 No. 61010-1-12, third edition, including a later version of the same standard incorporating the same level of testing requirements.

| | |
|---|---|
| Peak compressor performance | 225 scfm |
| Peak refrig. dryer performance (only with pre-separation) | 450 scfm |
| Peak filter performance (behind dryer) | 2250 scfm |

## Electrical data

### 6 Electrical data

| | |
|---|---|
| Supply voltage<br>(see type plate) | 95…240 VAC ±10% (50…60 Hz) /100…125 VDC ±10%<br>or<br>24…48 VAC ±10% (50…60 Hz) / 18…72 VDC ±10% |
| Power consumption | P = 0.6 ... 3 VA (W) |
| Recommended<br>cable-jacket diameter | Ø 5.0…10 mm (0.20“…0.39“) |
| Recommended<br>wire cross section<br>Spring-loaded terminal<br>(voltage supply/relay) | 0.75...1.5 mm² (AWG 16...20) |
| Recommended<br>wire cross section<br>Screw terminal<br>(voltage supply) | 0.75...2.5 mm² (AWG 14...20) |
| Recommended<br>wire cross section<br>Spring-loaded terminal<br>(external test) | 0.75...1.0 mm² (AWG 18...20) |
| Recommended<br>wire cross section<br>Screw terminal<br>(relay/external test) | 0.75...1.5 mm² (AWG 16...20) |
| Recommended<br>stripping of cable jacket<br>(voltage supply/relay) | ~ 30 mm (~ 1.18") |
| Recommended<br>stripping of cable jacket<br>(external test) | ~ 90 mm (~ 3.54") |
| Recommended<br>length of the wire end tube<br>Spring-loaded terminal | ~ 8 mm (~ 0.31 inch) |
| Recommended<br>length of the wire end tube<br>Screw terminal | ~ 6 mm (~ 0.24 inch) |
| Connection data of the potential-free contact<br>Switch to load*) | AC: max. 250V / 1A<br>DC: max. 30V / 1A |
| Connection data of the<br>potential-free contact<br>Switch to low signal*) | min. 5 VDC / 10 mA |
| Connection data of the<br>external test contact | on the unit side 5 VDC; switching current ≥ 0,5 mA |
| Protection class | IP 67 |
| Overvoltage category<br>(IEC 61010-1) | II |

VAC = V alternating current
VDC = V direct current

*) The switching of loads means that the properties of the contact are no longer suitable for the switching of low signals.

**Dimension drawing**

## 7 Dimension drawing

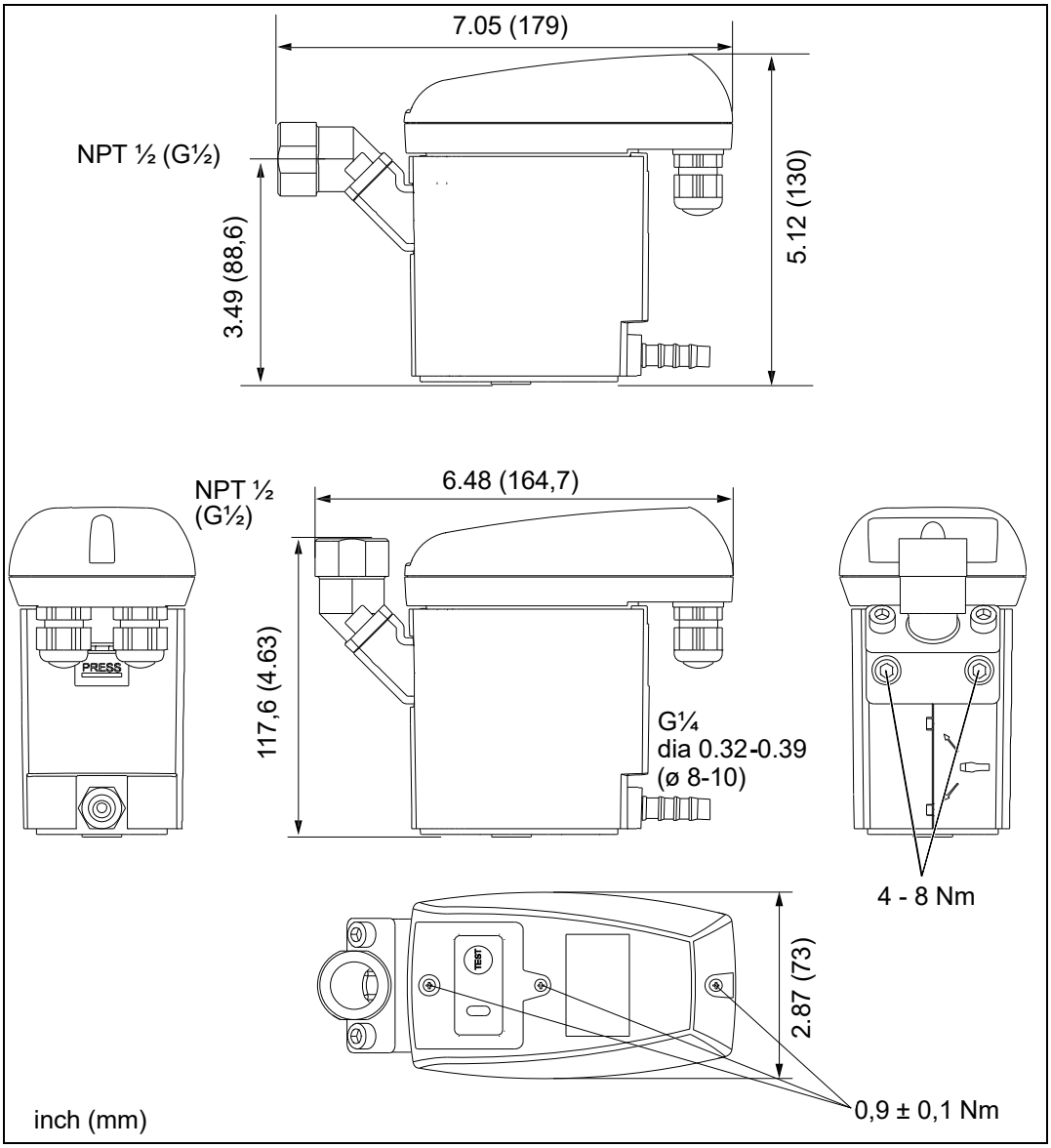

## Function

### 8 Function

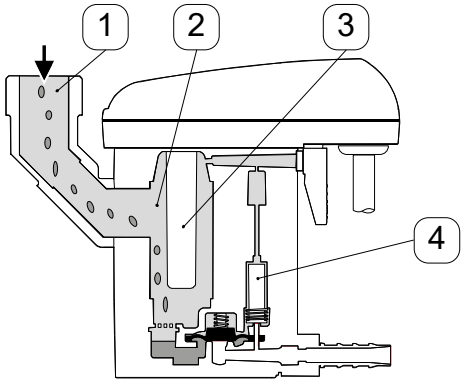


Via the inlet line (1) the condensate flows into the ECO-DRAIN 31 and accumulates in the housing (2).

A capacitive functioning sensor (3) continuously registers the filling level and relays a signal to the electronic control as soon as the container is filled.

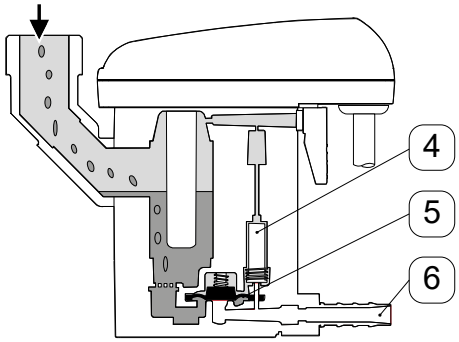


The pilot valve (4) is activated and the membrane (5) opens the outlet line to discharge the condensate (6).

When the ECO-DRAIN 31 is empty, the outlet line is reclosed tightly in time before unnecessary compressed-air losses occur.

## Function

At the ECO-DRAIN 31, two LEDs indicate the individual operating states.

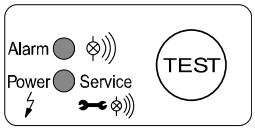


When applying supply voltage, the ECO-DRAIN 31 carries out a **self-test**.

Both LEDs are lit for approximately 1 second, subsequently, the device changes over to the **"ready-to-operate"** state.

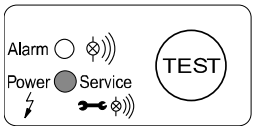


**Ready to operate, voltage is applied.**

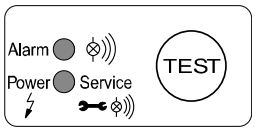


In the event that the condensate discharge is disturbed, an alarm mode will start which is indicated by the flashing of the red alarm LED.

**Malfunction/alarm**

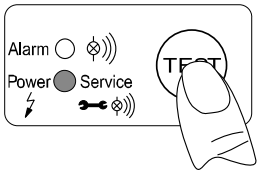


Test of the valve function (manual drainage): press and hold the button for approximately 2 s.

Test of the alarm function (see below): press and hold the button for at least 1 min.

**Do not use for permanent drainage.**

Switching sequence of the valve in the alarm mode

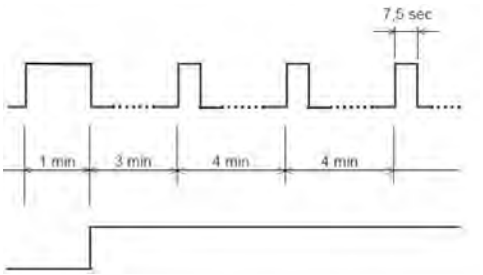


Trouble indication via a potential-free contact

**Alarm mode:**

In the event that the ECO-DRAIN is not empty after one minute, a trouble indication is released:

- The alarm LED flashes.
- The alarm relay switches over (the signal can be picked off potential-freely).
- The valve opens every four minutes for 7.5 seconds.
- When the malfunction has been eliminated, the ECO-DRAIN will switch back automatically into the normal mode.

**Possible trouble sources include :**

- Mistakes during installation
- Dropping below the minimum pressure
- Excessive accumulation of condensate (excess load)
- Blocked / obstructed outlet line
- Extreme amount of dirt particles
- Frozen pipe work

## Function

The ECO-DRAIN 31 releases a maintenance message for a service that is to be carried out.

Depending on the operating mode, a visual maintenance message (service) is activated which signalizes the replacement of the service unit.

The maintenance message is indicated by the flashing supply voltage-LED "Power".

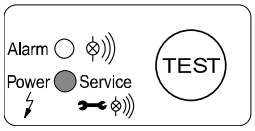


The maintenance message is released after 2 x 8.760 h or one million switching cycles.

The maintenance signal is released when one of these two values is reached.

In the event of a power outage or when the energy supply is deactivated, the status of the timer will be maintained.

The activities to be carried out regarding maintenance are described in the chapter entitled "Check and maintenance".

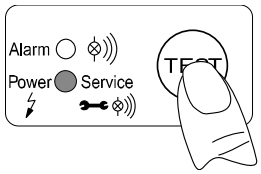


Prior to the replacement of the service unit, a reset needs to be carried out. The control unit is released by actuating the arresting hook. When removed, the TEST button must be pressed and held for at least five seconds.

## 9 Installation

**Danger!**

**Compressed air!**

**Risk of serious injury or death through contact with quickly or suddenly escaping compressed air or through bursting plant components or plant components which are not secured.**

**Measures:**

- Do not exceed the maximum operating pressure (see type plate).
- **Only carry out service measures when the system is pressure less.**
- Use pressure-resistant installation material only.
- The feed pipe must be tubed firmly. Discharge pipe: short, fixed pressure hose onto pressure-resistant pipe.
- Make sure that persons or objects cannot be hit by condensate or escaping compressed air.

**Caution!**

**Malfunction during operation!**

**Through incorrect installation and poor maintenance, malfunction may occur at the ECO-DRAIN.**

**Condensate which is not discharged may cause damage to plants and in production processes.**

**Measures:**

- Condensate drainage which is reliable in performance directly optimizes the compressed-air quality.
- To prevent damage and breakdowns, it is imperative to observe the following:
  - Exact compliance with the specifications of use and with the performance parameters of the ECO-DRAIN, in connection with the case of application (see "Proper use" section)
  - Exact compliance with the installation- and operation instructions in this manual
  - Regular maintenance and control of the ECO-DRAIN in accordance with the instructions in this operating manual

**Note**

It is imperative to observe all hazard statements and warnings listed here.

Please also observe all regulations and notes regarding industrial safety and fire prevention at the place of installation.

As a matter of principle, only use suitable and appropriate tools and materials in a proper condition.

Do not use aggressive cleaners and improper devices such as high-pressure cleaners.

Please note that condensates may contain aggressive or harmful components. Therefore, skin contact should be avoided.

Condensate is subject to mandatory waste disposal. As such, it must be collected in suitable containers, and disposed of or processed properly.

## Installation

**Installation instructions:**

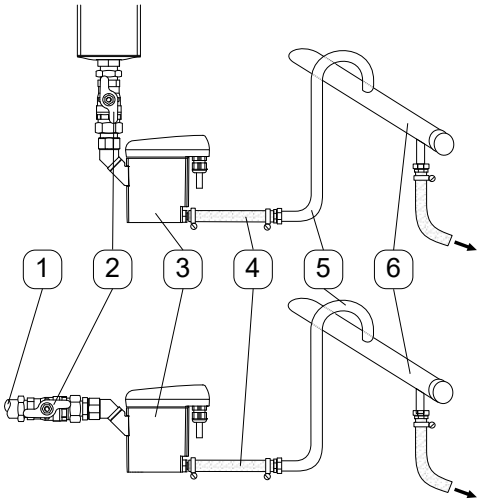


- Only the displayed installation position of the

  ECO-DRAIN (3) is permissible. Never install in a horizontal or any other tilted position.
- Feed pipe (1) and ball valve (2) at least G½.
- No filter or screen in the inlet line.
- Slope in the inlet line >1%.
- Use ball valves (2) only.
- Operating pressure: min. 0,8/1,2 bar (12/17 psig), max. 16 bar (230 psig). See type plate.
- Short pressure hose (4) fixed on a pressure-resistant pipe.
- The required minimum pressure increases by 0,1 bar (1,4 psi) per metre gradient in the discharge pipe (5).
- Discharge pipe (5) rising by max. 5 m (16,4ft).
- Install manifold (6) ½" with a slope of 1%.
- Introduce the discharge pipe (5) from the top into the manifold (6).
- Prior to the start-up, always carry out a leak test and verify the correct engagement of the control unit.

## Installation

| wrong | correct | |
|---|---|---|
| 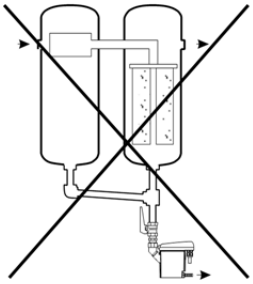 | 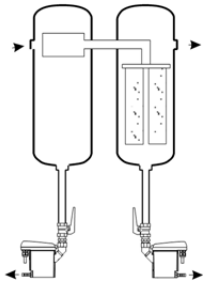 | **Pressure differences!**<br><br>Each condensate accumulation point must be drained separately. |
| 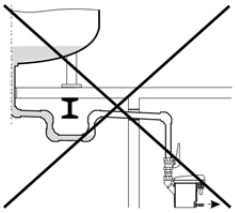 | 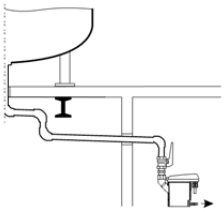 | **Continuous slope!**<br><br>Avoid a water pocket when installing the feed pipe |
| 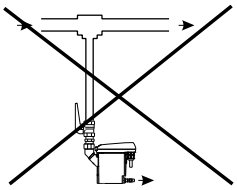 | 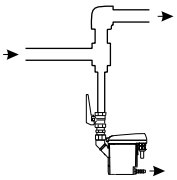 | **Deflector area!**<br><br>If drainage is to be carried out directly from the pipe, deflection of the air flow will be useful. |
| 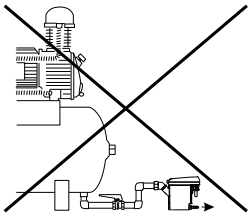 | 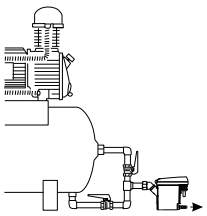 | **Ventilation!**<br><br>If the slope in the inlet line is not sufficient or if any other inflow problems occur, a venting line needs to be installed. |

## Electrical installation

### 10 Electrical installation

**Danger!**
**Supply voltage!**
**There is the risk of an electric shock involving injury or death when coming into contact with non-insulated components carrying supply voltage.**

**Measures:**

- During electric installations, all regulations in force need to be adhered to (e.g. VDE 0100 / IEC 60364).
- **When the control unit is open, service and installation works must only be undertaken when the system is deactivated.**
- **The removed control unit has no IP degree of protection.**
- All types of electrical works must be carried out by authorized and qualified personnel only.

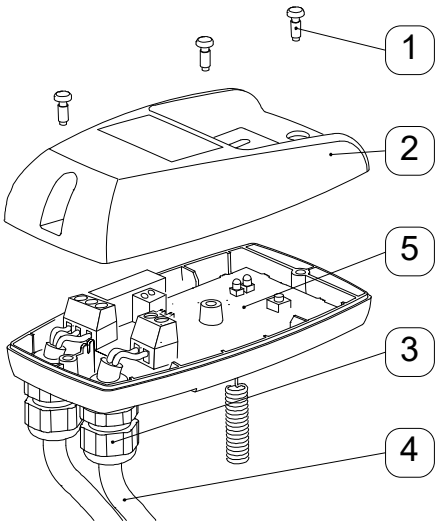


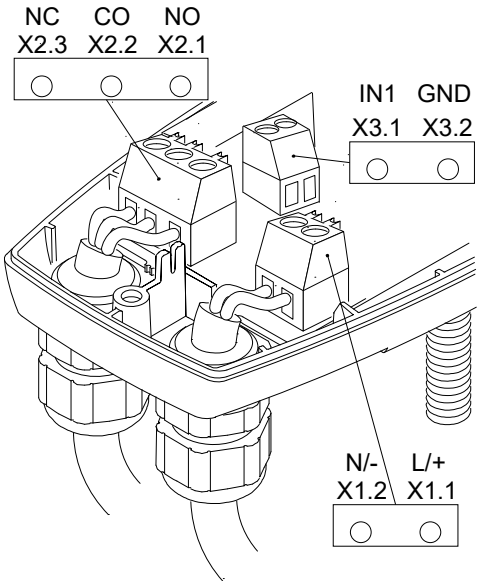


**Note:**

**Power supply connection:**

1. Read the permissible supply voltage on the type plate and make sure this voltage is observed.
2. For the supply voltage, a reliably accessible separator must be provided close-by (e.g. power plug or switch), which separates all current-carrying conductors.
3. At a low voltage supply (< 50 VAC / < 75 VDC), only use a protective extra-low-voltage.
4. Carry out installation in accordance with VDE 0100 / IEC 60364.
5. Observe the terminal assignment.
6. Do not install when the device is energized.
7. Unscrew the screws (1) and remove the upper part of the cover (2).
8. Unscrew the threaded cable connection (3), remove the plug (if there is one), and lead the cable (4) for the power supply through.
9. Connect the cable (4) with terminals X1 (1.1, 1.2) (5).
10. Install the cables as shown (see also terminal assignment in the following text).
11. Tighten the threaded cable connection (3) with a slightly sealing effect.
12. Put on the upper part of the cover (2) and tighten the screws (1) fingertight.

## Electrical installation

**Connection of the potential-free contact and of the external test:**

1. Selection of the suitable cable.
2. Connection to X2 and X3, as shown on the left.
3. The installation steps are the same as for the power supply connection.
4. If the potential-free contact carries voltage that is dangerous in the case of contact, a corresponding separator must also be provided, as described above.
5. When using the potential-free contacts and the connection external test, sufficient clearance to the other parts of the unit, or suitable insulation in accordance with EN 60664-1 must be ensured.
6. When using a multiwire, common line for the connection of the potential-free contact and the external test, this line must be suitable for the highest occurring voltage and the intended temperature range with regard to its nominal ratings.

## Electrical installation

**Terminal assignment supply voltage (operating voltage)**

| X 1 | | X 2 | | | X 3 | |
|---|---|---|---|---|---|---|
| L/+ | N/- | NO | CO | NC | IN1 | GND |
| phase | neutral | normally open | common | normally closed | external test (IN1) | GND |
| 1.1 | 1.2 | 2.1 | 2.2 | 2.3 | 3.1 | 3.2 |

Power supply
- X 1.1 L/+
- X 1.2 N/-

L = Outer conductor
N = Neutral conductor

**Terminal assignment low voltage (operating voltage)**

| X 1 | | X 2 | | | X 3 | |
|---|---|---|---|---|---|---|
| L/+ | N/- | NO | CO | NC | IN1 | GND |
| power | power | normally open | common | normally closed | external test (IN1) | GND |
| 1.1 | 1.2 | 2.1 | 2.2 | 2.3 | 3.1 | 3.2 |

Power supply
- X 1.1 L/+
- X 1.2 N/-

**Terminal assignment of the potential-free contact and of the external test**

| X 1 | | X 2 | | | X 3 | |
|---|---|---|---|---|---|---|
| L/+ | N/- | NO | CO | NC | IN1 | GND |
| power | power | normally open | common | normally closed | external test (IN1) | GND |
| 1.1 | 1.2 | 2.1 | 2.2 | 2.3 | 3.1 | 3.2 |

Fault indication/potential-free contact:
- X 2.1 n.o.
- X 2.2 com.
- X 2.3 n.c.

n.c. - com. closed in the event of malfunction or power failure
n.o. - com. closed during normal operation
(closed current principle)
The contacts X2.1 - 2.3 are potential-free.
External test / remote control:
- X 3.1 external test (IN1)
- X 3.2 GND

Contacts connected = test active = discharge
Contacts open = test inactive
The contacts X 3.1 -3.2 are not potential-free.

## Electrical installation

**Note:**

At a low-voltage supply (< 50 VAC / < 75 VDC), only use a protective extra-low-voltage.
Tighten the threaded cable connection with a slightly sealing effect.

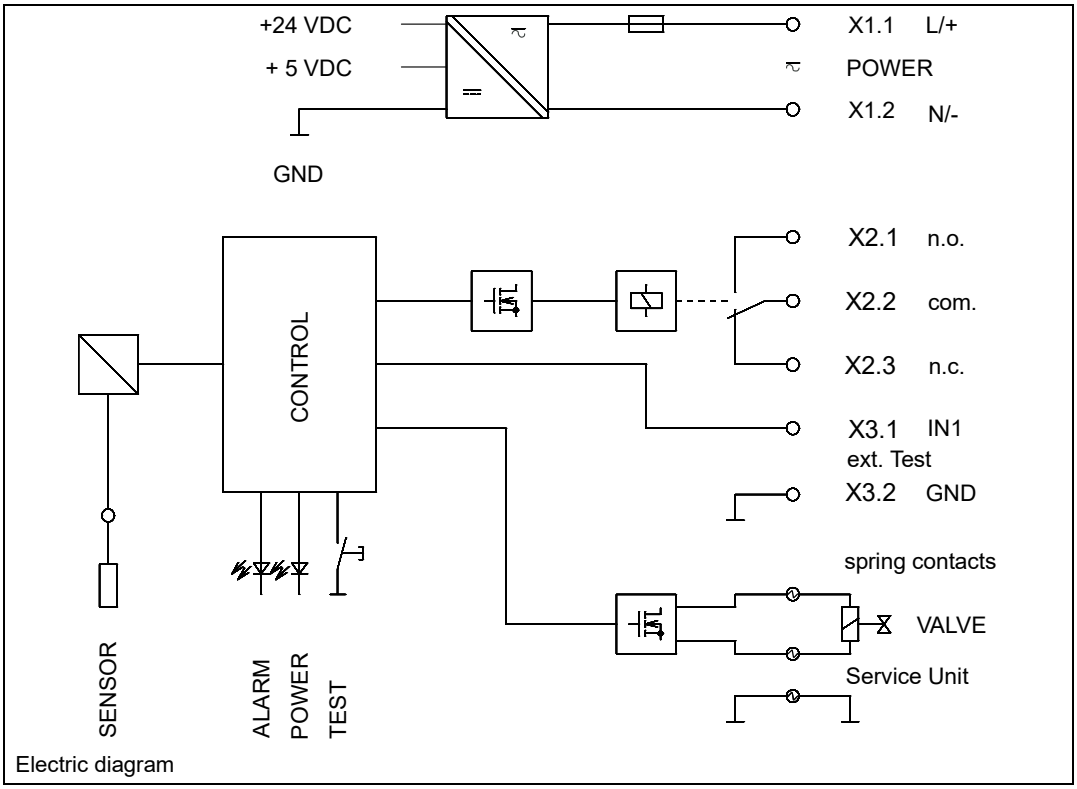

Electric diagram

## Inspection and maintenance

### 11 Inspection and maintenance

**Danger!**
**Compressed air!**
**Risk of serious injury or death through contact with quickly or suddenly escaping compressed air or through bursting plant components or plant components which are not secured.**

**Measures:**
- Do not exceed the maximum operating pressure (see type plate).
- **Only carry out service measures when the system is pressure less.**
- Use pressure-resistant installation material only.
- The feed pipe must be tubed firmly. Discharge pipe: short, fixed pressure hose onto pressure-resistant pipe.
- Make sure that persons or objects cannot be hit by condensate or escaping compressed air.

**Danger!**
**Supply voltage!**
**There is the risk of an electric shock involving injury or death when coming into contact with non-insulated components carrying supply voltage.**

**Measures:**
- During electric installations, all regulations in force need to be adhered to (e.g. VDE 0100 / IEC 60364).
- **When the control unit is open, service and installation works must only be undertaken when the system is deactivated.**
- **The removed control unit has no IP degree of protection.**
- All types of electrical works must be carried out by authorized and qualified personnel only.

**Caution!**
**Malfunction during operation!**
**Through incorrect installation and poor maintenance, malfunction may occur at the ECO-DRAIN.**
**Condensate which is not discharged may cause damage to plants and in production processes.**

**Measures:**
- Condensate drainage which is reliable in performance directly optimizes the compressed-air quality.
- To prevent damage and breakdowns, it is imperative to observe the following:
  - Exact compliance with the specifications of use and with the performance parameters of the ECO-DRAIN, in connection with the case of application (see "Proper use" section)
  - Exact compliance with the installation- and operation instructions in this manual
  - Regular maintenance and control of the ECO-DRAIN in accordance with the instructions in this operating manual

## Inspection and maintenance

**Note**

It is imperative to observe all hazard statements and warnings listed here.

Please also observe all regulations and notes regarding industrial safety and fire prevention at the place of installation.

As a matter of principle, only use suitable and appropriate tools and materials in a proper condition.

Do not use aggressive cleaners and improper devices such as high-pressure cleaners.

Please note that condensates may contain aggressive or harmful components. Therefore, skin contact should be avoided.

Condensate is subject to mandatory waste disposal. As such, it must be collected in suitable containers, and disposed of or processed properly.

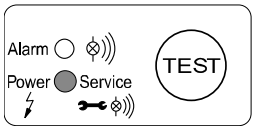


**Maintenance recommendation:**

After 2 x 8,760 operating hours or one million switching cycles, a maintenance message is released.

The green power LED flashes. Afterwards, or at the latest after two years (2 x 8,760 operating hours), the service unit (5) needs to be replaced.

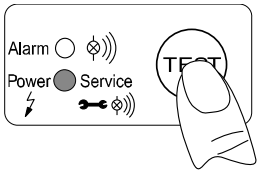


1. Prior to the replacement of the service unit, a reset needs to be carried out. The control unit is released by actuating the arresting hook. When removed, the TEST button below the LED must be pressed and held for at least five seconds.

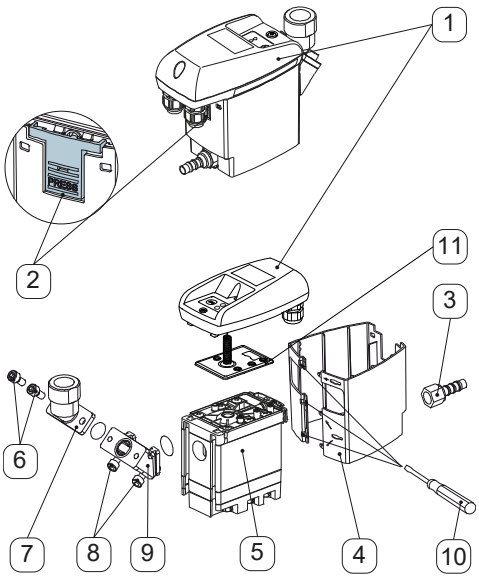


2. Remove the control unit (1) by pressing the arresting hook (2).
3. Unfasten the ECO-DRAIN 31 from the outlet (3).
4. Remove the design shell (4) (if there is one) using a screwdriver (10).
5. Detach the service unit (5) from the tubing at the inlet by removing the union nut.
6. **or** remove the screws (6) from the angle nozzle (7).

## Inspection and maintenance

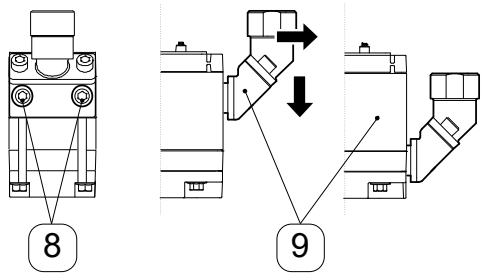


$M_{max}$ = 4...8 Nm

7. **or** remove the screws (8) at the intermediate adapter (9) and remove the latter from the service unit by pulling it downwards.
8. Check whether or not the new service unit (5) goes with the control unit (1) (model designation and color of the arresting hook (2)).
9. Installation of the new service unit (5) in reverse order.

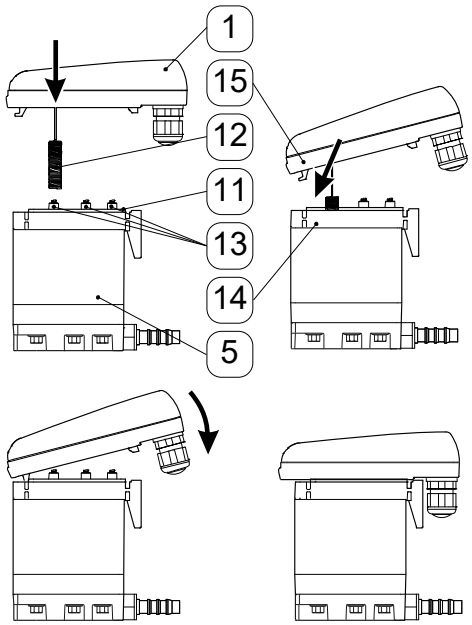


**Installation of the control unit on the service unit:**

1. Check whether or not the service unit (5) goes with the control unit (1) (model designation and color of the arresting hook).
2. Check whether or not the sealing mat (11) and the contact springs (13) are clean, dry, and free from impurities.
3. Introduce the sensor (12) into the sensor tube plate (14).
4. Hang the hook (15) of the control unit (1) in the sensor tube plate (14).
5. Press the control unit (1) against the service unit (5) and snap into place.

**Start-up subsequent to maintenance measures:**

Always carry out prior to the start-up:

- Leak test of the screwed connector
- Check of the electrical connections
- Check of the correct engagement of the control unit

## 12 Troubleshooting and fault elimination

| Symptoms | Possible reasons | Measures |
|---|---|---|
| 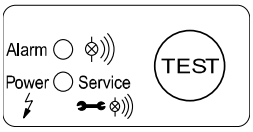 <br>**No LED lights up** | Supply voltage incorrect<br>Circuit board defective | Check the voltage on the type plate<br>Check the connections and the supply voltage<br>Check the circuit boards for possible damage |
| 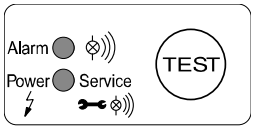 <br>**All LEDs are continuously on** | Failure during the start of the program<br>Circuit board defective | Separate the device from the supply voltage and reactivate after > 5 s<br>Check the circuit boards for possible damage |
| 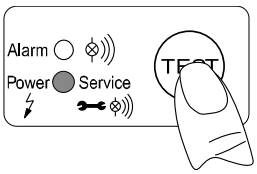 <br>**Test button pressed, but no condensate discharge** | Feed pipe and/or discharge pipe blocked or obstructed<br>Wear and tear<br>Circuit board defective<br>Service unit defective<br>Minimum pressure not reached<br>Maximum pressure exceeded | Check feed and discharge pipe<br>Check whether or not the valve opens audibly (press the test button several times for >2 seconds)<br>Check the circuit board for possible damage<br>Check the operating pressure |
| 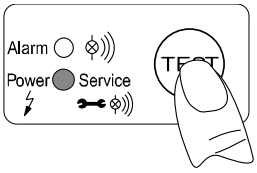 <br>**Condensate discharge only when the test button is pressed** | Feed pipe without sufficient slope<br>Cross section not large enough<br>Condensate accumulation too high (surge)<br>Service unit extremely dirty | Install feed pipe with a slope<br>Replace the service unit |
| 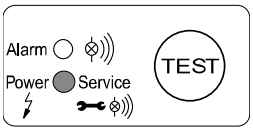 <br>**Device blows off continuously** | Service unit defective or dirty | Replace the service unit |

## Elements and components

### 13 Elements and components

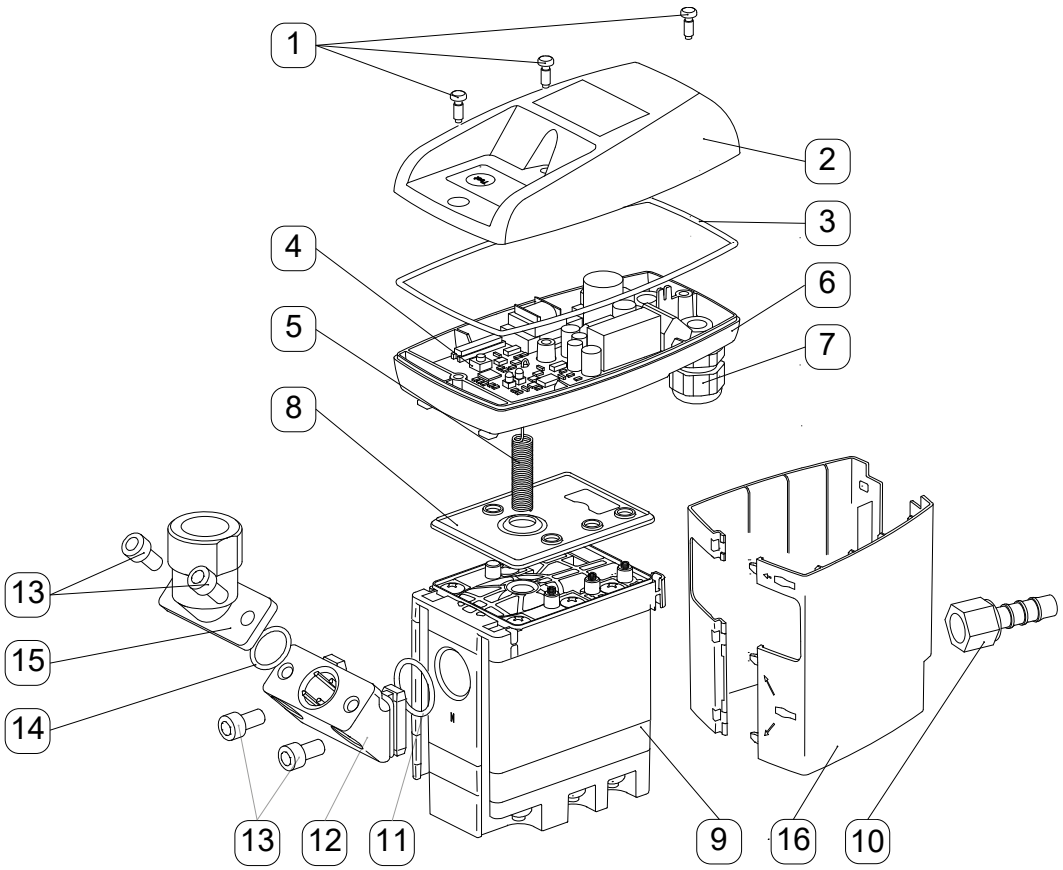


1 Screw 3.5 x 10
2 Upper part of the cover
3 Moulded gasket
4 Circuit board
5 Sensor
6 Lower part of the cover
7 Cable bushing
8 Sealing mat
9 Service unit
10 Hose connector
11 O-ring 20 x 2
12 Intermediate adapter
13 Screw M6 x 12
14 O-ring 14 x 1.78
15 Angle adaptor
16 Design shell

## 14 Recommended spare parts

| Available sets of spare parts | Contents | Order number |
|---|---|---|
| Service Unit AN8247400370<br>for ANECODRAIN31<br><br>Service Unit AN8247400370*<br>for ANECO31-24DC | 8, 9, 11** | AN8247400370<br><br>AN8247400370* |
| Gasket kit | 3, 8, 11**, 14** | AN8247400390 |
| Design shell* | 16** | AN8247400410 |
| Connection adapter G**<br>Connection adapter NPT** | 11**, 12**, 13**, 14**, 15** | AN4010155<br>AN4012610 |

** Not for ECO-DRAIN 31 built-in

**A**

Alarm mode 11
Angle adapter 24
Angle nozzle 21

**B**

blows off 23
Both LEDs are continuously on 23

**C**

Circuit board 24
Components 24
Condensate discharge disturbed 23
Control unit 22

**D**

Danger compressed air 4, 13, 20
Danger supply voltage 5, 16, 20
Data 7
Deflector area 15
Degree of protection 5, 16, 20
Design shell 24
Dimension drawing 9
Dimensions 9

**E**

Electric diagram 19
Electrical data 8
Electrical data 8
Electrical installation 16
Elements 24
Exclusion from the scope of application 6
Exclusion of a field of application 6

**F**

Failure 23
Fault clearance 23
Fault diagnosis 23
Fault elimination 23
Feed pipe 15
Field of application 6
Filling level 10
Function 10

**H**

Hose connector 24

**I**

Inlet line 10
Inspection 20
Installation 13
Installation and operating instructions 4
Installations- und Betriebsanleitung 4
Instructions, safety instructions 4
Intermediate adapter 22, 24

**L**

Lower part of the cover 24

**M**

Maintenance 20
Maintenance recommendation 21
Malfunction 23
Membrane 10
Mounting 13

**N**

No condensate discharge 23
No LED lights up 23

**O**

Order number 25
Outlet line 10

**P**

Piktogramme 4
Pilot valve 10
Pressure differences 15
Proper use 6

**Q**

Qualified personnel 5, 16, 20

**R**

Recommended spare parts 25

**S**

Safety instructions 4
Self-test 11
Sensor 24
Sensor tube plate 22
Service measures 4, 13, 20
Service unit 21, 24
Sets of spare parts 25
Slope 15
Spare parts 5, 25
Symbole 4

**T**

Technical data 7
Trouble sources 11
Troubleshooting 23

**U**

Upper part of the cover 24

**V**

Venting line 15

**W**

Water pocket 15

**CANADA**
KAESER COMPRESSORS, Inc.
3760 La Vérendrye
Boisbriand, QC J7H 1H5 Canada
Phone: (450) 971-1414 • Fax: (450) 971-1415
E-mail: info.canada@kaeser.com

**MEXICO**
KAESER COMPRESORES de México S. de R.L de C.V.
Calle 2 No. 123
Parque Industrial Jurica
76100 Querétaro, Qro México
Teléfono: (52) 442-218-6448 • Fax: (52) 442-218-6449
E-mail: sales.mexico@kaeser.com

**USA**
KAESER COMPRESSORS, Inc.
511 Sigma Drive
P.O. Box 946
Fredericksburg, VA 22404
Phone: 540-898-5500 • Fax: 540-898-5520
E-mail: info.usa@kaeser.com

**www.kaeser.com**

Subject to technical modifications without notice / errors accepted.
eco-drain_31_manual_en-us_01-2336_v02.
Printed in Germany

**ECO-DRAIN 31**

**D - deutsch**

**E - english**

**F - français**

**NL - nederlands**

# Installations- und Betriebsanleitung

# Instructions for installation and operation

# Instructions de montage et de service

# Installatie- en Gebruiksaanwijzing

**Kondensatableiter / Condensate drain / Purgeur de condensat / Condensaatafvoer**

## ECO-DRAIN 12
## ECO-DRAIN 12 CO
## ECO-DRAIN 12 CO PN63

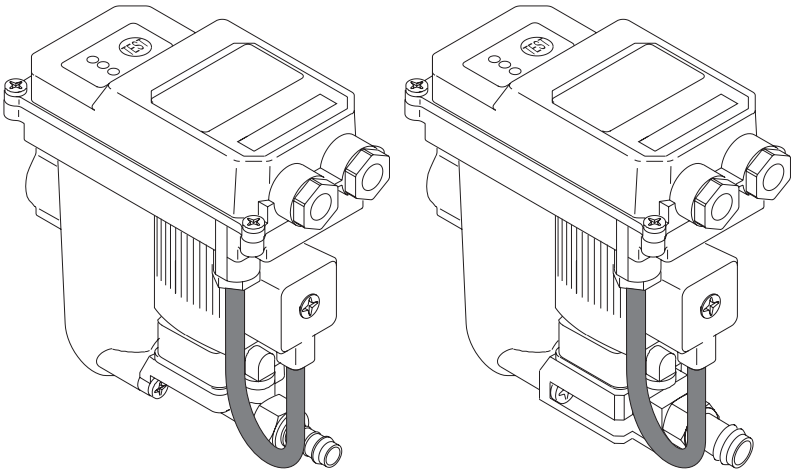

01-046

**ECO-DRAIN 12_10 D E F NL**

Sicherheitshinweise

**Bitte prüfen, ob diese Anleitung auch dem Gerätetyp entspricht.**
Beachten Sie alle in dieser Bedienungsanleitung gegebenen Hinweise. Sie enthält grundlegende Informationen, die bei Installation, Betrieb und Wartung zu beachten sind. Daher ist diese Bedienungsanleitung unbedingt vor Installation, Inbetriebnahme und Wartung vom Monteur sowie vom zuständigen Betreiber/Fachpersonal zu lesen. Die Bedienungsanleitung muss jederzeit zugänglich am Einsatzort des ECO-DRAIN 12 / 12 CO / 12 CO PN63 verfügbar sein.
Zusätzlich zu dieser Betriebsanleitung sind ggf. örtliche bzw. nationale Vorschriften zu beachten.
Stellen Sie sicher, dass der ECO-DRAIN 12 / 12 CO / 12 CO PN63 nur innerhalb der zulässigen und auf dem Typenschild aufgeführten Grenzwerte betrieben wird. Es besteht sonst eine Gefährdung für Menschen und Material und es können Funktions- und Betriebsstörungen auftreten.
Bei Unklarheiten oder Fragen zu dieser Installations- und Betriebsanleitung setzen Sie sich bitte mit KAESER Kompressoren SE in Verbindung.

**Gefahr!**
**Druckluft!**
**Durch Kontakt mit schnell oder schlagartig entweichender Druckluft oder durch berstende und/oder nicht gesicherte Anlagenteile besteht Gefahr schwerer Verletzungen oder Tod.**

**Maßnahmen:**
- Max. Betriebsdruck nicht überschreiten (siehe Typenschild).
- **Wartungsarbeiten nur im drucklosen Zustand durchführen.**
- Nur druckfestes Installationsmaterial verwenden.
- Zulaufleitung fest verrohren. Ablaufleitung: kurzer, fixierter Druckschlauch an druckfestem Rohr.
- Verhindern Sie, dass Personen oder Gegenstände von Kondensat oder entweichender Druckluft getroffen werden können.

**Gefahr!**
**Netzspannung!**
**Durch Kontakt mit Netzspannung führenden nicht isolierten Teilen besteht Gefahr eines elektrischen Schlages mit Verletzung und Tod.**

**Maßnahmen:**
- Bei elektrischer Installation alle geltenden Vorschriften einhalten (z.B. VDE 0100 / IEC 60364).
- Wartungs- und Installationsarbeiten bei geöffneter Steuereinheit nur im spannungsfreien Zustand durchführen.
- Die abgenommene Steuereinheit hat keinen IP-Schutzgrad.
- Alle elektrischen Arbeiten dürfen nur von befugtem Fachpersonal durchgeführt werden.

**Weitere Sicherheitshinweise:**
- Bei Installation und Betrieb sind ebenfalls die geltenden nationalen Bestimmungen und Sicherheitsvorschriften einzuhalten.
- Den ECO-DRAIN 12 nicht in explosionsgefährdeten Bereichen einsetzen.
- Bei den Zulaufverschraubungen sind übermäßige Anzugskräfte zu vermeiden. Das gilt insbesondere für konische Verschraubungen.
- Der ECO-DRAIN 12 ist nur bei anliegender Spannung funktionstüchtig.
- Test-Taster nicht zur Dauerentwässerung nutzen.
- Nur Original-Ersatzteile verwenden. Nur so ist eine einwandfreie Funktion sichergestellt.

**Zusatzhinweise:**
- Bei Montage Schlüsselflächen am Zulauf (Schlüsselweite SW32) zum Gegenhalten benutzen.

**Vorsicht!**
**Fehlfunktionen in der Anwendung!**
**Durch fehlerhafte Installation und mangelhafte Wartung kann es zu Fehlfunktionen am ECO-DRAIN kom men. Nicht abgeleitetes Kondensat kann zu Schäden an Anlagen und in Fertigungsprozessen führen.**

**Maßnahmen:**

- Eine funktionssichere Kondensatableitung optimiert direkt die Druckluftqualität.
- Zur Vermeidung von Schäden und Ausfällen bitte unbedingt beachten:
  - genaues Einhalten der bestimmungsgemäßen Verwendung und der Betriebsparameter des ECO-DRAIN im Zusammenhang mit dem Einsatzfall (siehe dazu Kapitel „Bestimmungsgemäße Verwendung“)
  - genaues Einhalten der Installations- und Betriebshinweise in dieser Anleitung
  - regelmäßige Wartung und Kontrolle des ECO-DRAIN nach den Hinweisen in dieser Betriebsanleitung

## Bestimmungsgemäße Verwendung

- Der ECO-DRAIN ist ein elektronisch-niveaugeregelter Kondensatableiter für Druckluftanlagen.
- Der Einsatz erfolgt innerhalb der zulässigen Betriebsparameter (siehe Technische Daten).
- Der ECO-DRAIN kann Kondensat unter Betriebsdruck nahezu ohne Druckluftverlust aus den Anlagenteilen ableiten.
- Der ECO-DRAIN benötigt zur Funktion eine Betriebsspannung und einen Betriebsdruck (siehe Technische Daten).
- Bei einem Einsatz in Anlagen mit erhöhten Anforderungen an die Druckluftqualität (Lebensmittelindustrie, Medizintechnik, Laborausrüstungen, spezielle Prozesse usw.), muss der Betreiber über Maßnahmen zur Überwachung der Druckluftqualität entscheiden. Diese beeinflussen die Sicherheit der nachfolgenden Prozesse und können Schäden an Menschen und Anlagen vermeiden.
- Es ist Aufgabe des Betreibers, die genannten Bedingungen während der gesamten Betriebsdauer zu gewährleisten.
- Für den Einsatz in $CO_2$-Anlagen muss ein ECO-DRAIN mit der Spezifikation CO (ECO-DRAIN .. CO) verwendet werden.
- Der ECO-DRAIN und die Kondensatzuleitung sind vor Frost zu schützen, da sonst die Funktion nicht gewährleistet ist.
  KAESER Kompressoren SE bietet auch hierfür geeignete Produkte an.

## Ausschluss vom Anwendungsbereich

- Der ECO-DRAIN kann als Kondensatableiter **allein keine** definierte Druckluftqualität garantieren, hierzu sind andere zusätzliche technische Einrichtungen notwendig.
- Der ECO-DRAIN 12 ist **nicht** für den Einsatz an Unterdruck oder atmosphärischen Umgebungsdruck führenden Anlagen oder in Ex-Bereichen geeignet.
- Der ECO-DRAIN darf nicht dauerhafter direkter Sonnen- oder Wärmestrahlung ausgesetzt werden.
- Der ECO-DRAIN 12 darf nicht in Bereichen mit aggressiver Atmosphäre installiert und betrieben werden.

Safety instructions

**Please check whether or not these instructions correspond to the device type!**
Please adhere to all advice given in these operating instructions. They include basic information which needs to be observed during installation, operation and maintenance. Therefore, it is vital for the technician and the responsible operator /skilled personnel to read these operating instructions prior to installation, start-up and maintenance. The operating instructions must be accessible at all times at the place of application of the ECO-DRAIN 12 / 12 CO /12 CO PN63.
In addition to these operating instructions, local and national regulations need to be observed, if required.
Make sure that the ECO-DRAIN 12 / 12 CO /12 CO PN63 is operated only within the permissible limit values indicated on the type plate. Any deviation involves a risk for persons and materials, and may result in malfunction and service failures.
If you have any queries regarding these installation and operating instructions, please contact
KAESER Kompressoren SE.

**Danger!**
**Compressed air!**
**Risk of serious injury or death through contact with quickly or suddenly escaping compressed air or through bursting plant components or plant components which are not secured.**

**Measures:**
- Do not exceed the maximum operating pressure (see type plate)!
- **Only carry out service measures when the system is pressureless.**
- Use pressure-resistant installation material only.
- The feed pipe must be tubed firmly. Discharge pipe: short, fixed pressure hose onto pressure-resistant pipe.
- Make sure that persons or objects cannot be hit by condensate or escaping compressed air.

**Danger!**
**Supply voltage!**
**There is the risk of an electric shock involving injury or death when coming into contact with non-insulated components carrying supply voltage.**

**Measures:**
- During electric installations, all regulations in force need to be adhered to (e.g. VDE 0100 / IEC 60364).
- Only carry out maintenance and installation work with the opened control unit when it is de-energized.
- The removed control unit has no IP degree of protection.
- All types of electrical work must be carried out by authorised and qualified personnel only.

**Further safety advice:**
- For installation and operation, the national regulations and safety codes in force must also be adhered to.
- Do not use the ECO-DRAIN 12 in hazardous areas.
- Regarding the inlet screw joints, excessive tightening forces must be avoided. This applies in particular to conical screw joints.
- The ECO-DRAIN 12 will only function when voltage is applied.
- Do not use the test button for permanent drainage!
- Only use genuine spare parts! This is imperative to ensure perfect functioning.

**Additional advice:**
- During installation, use the spanner flat at the feed pipe (width across flat 32) as a back rest.

**Caution!**
**Malfunctions in the application!**
**Through incorrect installation and insufficient maintenance, the ECO-DRAIN can malfunction. Condensate which is not discharged can lead to damage to plants and in manufacturing processes.**

**Measures:**

- Fail-safe condensate discharge directly optimises the compressed-air quality.
- To prevent damage and failures, it is imperative
  - To comply with the provisions regarding proper use and with the operating parameters of the ECO-DRAIN in connection with the case of application (see chapter "Proper use").
  - To strictly adhere to the installation and operating advice in these instructions.
  - To maintain and check the ECO-DRAIN at regular intervals in accordance with the advice in these operating instructions.

Proper use

- The ECO-DRAIN is an electronically level-controlled condensate drain for compressed-air plants.
- It is employed within the permissible operating parameters (see "Technical data").
- The ECO-DRAIN is able to drain condensate under operating pressure from the plant components virtually without compressed-air losses.
- For its function, the ECO-DRAIN 12 requires an operating voltage and an operating pressure (see "Technical data").
- As far as the employment in plants with increased demands on the compressed-air quality is concerned (food industry, medical technology, laboratory equipment, special processes etc.), the operator must decide on measures for the monitoring of the compressed-air quality. These have an effect on the safety of the subsequent processes and may prevent damage to persons and plants.
- It is the task of the operator to ensure that the indicated conditions are met during the entire operating time.
- For the employment in $CO_2$ plants, a ECO-DRAIN with a CO specification (ECO-DRAIN ... CO) must be used.
- The ECO-DRAIN and the condensate supply line need to be protected against frost, as otherwise the function cannot be guaranteed. KAESER Kompressoren SE also offers suitable products for this purpose.

**Exclusion from the field of application**

- The ECO-DRAIN as a condensate drain **alone cannot** guarantee a defined compressed-air quality, for this purpose, other additional technical devices are required.
- ECO-DRAIN 12 is not suitable for use in plants carrying vacuum or atmospheric ambient pressure or in hazardous areas.
- The ECO-DRAIN must not be exposed to permanent direct solar or thermal radiation.
- ECO-DRAIN 12 must **not** be installed and operated in areas with an aggressive atmosphere.

Consignes de sécurité

**Vérifiez que cette notice corresponde bien au modèle d'appareil en votre possession.**
Respectez toutes les consignes données dans ce mode d'emploi. Il contient des informations fondamentales, à respecter lors de l'installation, de l'utilisation et de la maintenance. C'est pourquoi, il est impératif que ce mode d'emploi soit lu avant l'installation, la mise en service et la maintenance, par l'installateur ainsi que par l'exploitant et le personnel qualifié.
Le mode d'emploi doit être disponible et accessible à tout moment sur le lieu d'utilisation du ECO-DRAIN 12 / 12 CO /12 CO PN63.
En plus de ce mode d'emploi, il faut respecter les éventuelles prescriptions locales ou nationales.
Assurez-vous que le ECO-DRAIN 12 / 12 CO /12 CO PN63 ne soit utilisé qu'au sein des valeurs limites admissibles et mentionnées sur la plaque signalétique. Dans le cas contraire, il peut présenter un risque pour les personnes et le matériel, voire nuire au bon fonctionnement de l'installation ou générer des perturbations.
Si certains points ne sont pas clairs ou si vous avez des questions au sujet de ces instructions de montage et de service, n'hésitez pas à contacter la société KAESER Kompressoren SE.

**Danger !**
**Air comprimé !**
**Tout contact avec de l'air comprimé s'échappant rapidement ou de façon brutale ou tout contact avec des parties de l'installation présentant un risque d'éclatement peut causer de graves blessures ou entraîner la mort.**

**Mesures préventives :**
- Ne pas dépasser la pression de service maximale (voir plaque signalétique).
- **Dépressuriser le purgeur avant toute intervention d'entretien ou de maintenance.**
- N'utiliser que du matériel d'installation résistant à la pression.
- La conduite d'amenée doit toujours être réalisée en tuyauterie rigide et fixe. Conduite d'évacuation : flexible de faible longueur, fixé et relié à une tuyauterie, tous deux résistant à la pression.
- Veillez à ce qu'aucune personne ni objet ne risque d'être touché par le condensat ou l'air comprimé qui s'échappe.

**Danger !**
**Tension électrique !**
**Tout contact avec des éléments non isolés et sous tension présente un risque de choc électrique pouvant provoquer des blessures ou entraîner la mort.**

**Mesures préventives :**
- Lors de la réalisation de l'installation électrique, respecter toutes les prescriptions en vigueur (p. ex. VDE 0100 / IEC 60364).
- N'effectuez des travaux de maintenance et d'installation avec la centrale ouverte lorsque celle-ci est hors tension.
- L'unité de commande retirée n'a pas de degré de protection IP.
- Toute intervention électrique doit être réalisée exclusivement par un personnel qualifié et habilité.

**Autres consignes de sécurité :**
- Lors de l'installation et de l'utilisation, il faut également respecter les directives et consignes de sécurité en vigueur dans le pays en question.
- Ne pas utiliser le ECO-DRAIN 12 dans les atmosphères explosibles.
- Éviter les serrages trop importants au niveau des raccords de la conduite d'amenée Ceci est valable en particulier pour les raccords à filetage conique.
- Le ECO-DRAIN 12 n'est opérationnel que s'il est sous tension (alimentation électrique assurée).
- Ne pas utiliser le bouton Test pour l'évacuation permanente du condensat.
- Utiliser exclusivement des pièces de rechange d'origine. Seul le respect scrupuleux des consignes données peut garantir le parfait fonctionnement de l'appareil.

**Consignes supplémentaires :**
- Lors du montage, utiliser le méplat pour clé au niveau de l'arrivée (32 mm) pour maintenir le purgeur pendant le serrage.

**Prudence !**
**Dysfonctionnements au niveau de l'utilisation !**

**En cas d'installation incorrecte et de maintenance insuffisante, des dysfonctionnements peuvent apparaître au niveau du ECO-DRAIN.**
**Tout condensat non évacué risque d'endommager les installations et de porter atteinte aux processus de fabrication.**

**Mesures préventives :**

- Le bon fonctionnement de la purge des condensats permet une optimisation directe de la qualité de l'air comprimé.
- Pour éviter tout endommagement et tout arrêt de production, il est impératif de respecter les consignes suivantes :
  - Respecter scrupuleusement les instructions pour une utilisation conforme à l'usage prévu et les paramètres de fonctionnement du ECO-DRAIN dans le contexte de son utilisation (consulter à cet effet le chapitre „Utilisation conforme à l'usage prévu").
  - Respecter scrupuleusement toutes les instructions d'installation et d'utilisation communiquées dans cette notice.
  - Respecter scrupuleusement la périodicité de maintenance et de contrôle du ECO-DRAIN selon les indications de ce manuel d'utilisation.

### Utilisation conforme à l'emploi prévu

- Le ECO-DRAIN est un purgeur de condensat à régulation électronique de niveau pour les installations de production et distribution d'air comprimé.
- L'utilisation s'effectue dans le respect des paramètres de fonctionnement admissibles (voir caractéristiques techniques).
- Le ECO-DRAIN permet d'évacuer le condensat du réseau de distribution sous pression (pression de service) et ce, pratiquement sans perte de charge.
- Pour son fonctionnement, le ECO-DRAIN requiert une tension d'alimentation électrique et une pression de service (voir caractéristiques techniques).
- Lors d'une utilisation dans des installations soumises à des exigences plus poussées quant à la qualité de l'air comprimé (industrie alimentaire, techniques médicales, équipements de laboratoires, processus spéciaux, etc.), l'exploitant est tenu de prendre des mesures pour la surveillance de la qualité de l'air comprimé. Ces mesures ont une influence directe sur la sécurité des processus en aval et permettent ainsi d'éviter les dommages corporels et l'endommagement des installations.
- Il incombe à l'exploitant d'assurer les conditions mentionnées pendant toute la durée de service.
- Pour les installations de $CO_2$, il faut impérativement utiliser un ECO-DRAIN en version CO (ECO-DRAIN .. CO).
- Le ECO-DRAIN et la conduite d'amenée du condensat doivent être protégés contre le gel, sinon le fonctionnement n'est pas assuré. KAESER Kompressoren SE propose également des produits adéquats à cet effet.

### Exclusion du domaine d'application

- En tant que purgeur de condensat, le ECO-DRAIN ne peut pas garantir à lui seul une qualité d'air comprimé définie ; pour ce faire, il faut d'autres équipements techniques en plus.
- Le ECO-DRAIN 12 ne convient pas pour l'utilisation sur des installations sous vide ou fonctionnant à la pression atmosphérique ambiante, ni pour l'utilisation dans les atmosphères explosibles.
- Le ECO-DRAIN ne doit pas être exposé en permanence au rayonnement direct du soleil ou à un rayonnement thermique.
- Le ECO-DRAIN 12 ne doit pas être installé ni utilisé dans les domaines exposés à une atmosphère agressive.

Veiligheidsinstructies

**Controleer of deze handleiding ook overeenkomt met het apparaattype.**
Neem alle instructies in acht die in deze gebruiksaanwijzing worden gegeven. Zij omvat essentiële informatie die in acht moet worden genomen bij de installatie, het gebruik en het onderhoud. Daarom moet deze gebruiksaanwijzing vóór de installatie, de ingebruikname en het onderhoud absoluut gelezen worden door de monteur, de verantwoordelijke exploitant of het vakkundig personeel.
De gebruiksaanwijzing moet op elk gewenst moment toegankelijk beschikbaar zijn op de plaats waar de ECO-DRAIN 12 / 12 CO /12 CO PN63 wordt gebruikt.
Voorts moeten bij deze gebruiksaanwijzing eventueel lokale resp. nationale voorschriften in acht worden genomen.
Controleer of de ECO-DRAIN 12 / 12 CO /12 CO PN63 uitsluitend wordt gebruikt binnen de toegestane grenswaarden die ook zijn aangegeven op de instructieplaat. Zo niet bestaat er gevaar voor personen en materiaal en kunnen er functie- en bedrijfsstoringen optreden.
Neem contact op met KAESER Kompressoren SE als er onduidelijkheden of vragen zijn over deze installatie- en gebruikershandleiding.

**Gevaar!**
**Perslucht!**
**Contact met perslucht die snel of abrupt ontsnapt of wegspringende en/of niet beveiligde delen van de ins tallatie leveren gevaar op met zwaar letsel of dood tot gevolg.**

**Maatregelen:**
- Overschrijd de maximale bedrijfsdruk niet (zie instructieplaat).
- **Verricht onderhoudswerkzaamheden uitsluitend in drukloze toestand.**
- Gebruik uitsluitend drukbestendig installatiemateriaal.
- Verbind de toevoerleiding vast met het buizensysteem. Afvoerleiding: bevestig een korte hogedrukslang aan de drukbestendige buis.
- Voorkom dat personen of voorwerpen geraakt kunnen komen door condensaat of ontsnappende perslucht.

**Gevaar!**
**Netspanning!**
**Contact met niet-geïsoleerde delen die de netspanning voeren, levert gevaar op door elektrische schok met letsel en dood tot gevolg.**

**Maatregelen:**
- Volg bij elektrische installatie alle geldende voorschriften op (bijv. VDE 0100 / IEC 60364).
- Voer alleen onderhouds- en installatiewerkzaamheden uit terwijl de besturingsunit geopend is wanneer deze spanningsloos is.
- De verwijderde besturingseenheid heeft geen IP-beschermingsgraad.
- Alle elektrische werkzaamheden mogen uitsluitend worden uitgevoerd door bevoegd vakpersoneel.

**Overige veiligheidsinstructies:**
- Bij installatie en gebruik moeten tevens de geldende nationale bepalingen en veiligheidsvoorschriften in acht worden genomen.
- Gebruik de ECO-DRAIN 12 niet in explosiegevaarlijke zones.
- Vermijd overmatig aantrekken van de schroefverbindingen aan de toevoer. Dat geldt in het bijzonder voor conische schroefverbindingen.
- De ECO-DRAIN 12 kan alleen functioneren bij opgebrachte spanning.
- Gebruik de testknop niet voor continue drainage.
- Gebruik alleen originele reserveonderdelen. Alleen zo kan een foutloze werking worden gegarandeerd.

**Aanvullende instructies:**
- Gebruik bij montage de sleuteloppervlakken op de toevoer (sleutelbreedte SW32) om de ECO-DRAIN tegen te houden.

**Let op!**
**Storingen tijdens het gebruik!**
**Er kunnen storingen aan de ECO-DRAIN ontstaan als gevolg van een foutieve installatie en gebrekkig onderhoud.**
**Niet afgevoerd condensaat kan schade veroorzaken aan installaties en in productieprocessen.**

**Maatregelen:**

- Een veilig functionerende condensaatafvoer optimaliseert direct de persluchtkwaliteit.
- Neem het volgende absoluut in acht om schade en uitval te voorkomen:
  - Correct opvolgen van de instructies voor doelmatig gebruik en van de bedrijfsparameters van de ECO-DRAIN afhankelijk van de gebruikssituatie (zie hiervoor hoofdstuk "Doelmatig gebruik")
  - Correct opvolgen van de installatie- en bedrijfsinstructies in deze handleiding
  - Regelmatig onderhoud en controle van de ECO-DRAIN volgens de instructies in deze gebruiksaanwijzing

## Doelmatig gebruik

- De ECO-DRAIN is een elektronisch niveaugeregelde condensaatafvoer voor persluchtinstallaties.
- Het gebruik vindt plaats binnen de toegestane bedrijfsparameters (zie technische gegevens).
- De ECO-DRAIN kan condensaat onder bedrijfsdruk praktisch zonder persluchtverlies uit de installatie afvoeren.
- Der ECO-DRAIN heeft voor het functioneren een bepaalde bedrijfsspanning en bedrijfsdruk nodig (zie technische gegevens).
- Bij een gebruik in installaties met hogere eisen aan de persluchtkwaliteit (voedingsmiddelenindustrie, medische techniek, laboratoriumuitrustingen, speciale processen enz.) moet de exploitant maatregelen treffen voor het bewaken van de persluchtkwaliteit. Deze hebben een invloed op de veiligheid van de nakomende processen en kunnen schade aan personen en installaties voorkomen.
- Het is de taak van de exploitant om de genoemde voorwaarden tijdens de totale bedrijfsduur te waarborgen.
- Voor toepassing in $CO_2$-installaties moet een ECO-DRAIN met de specificatie CO (ECO-DRAIN .. CO) worden gebruikt.
- Der ECO-DRAIN en de condensaatafvoer moeten beschermd worden tegen vorst omdat de werking anders niet gewaarborgd is.

  KAESER Kompressoren SE biedt ook hiervoor geschikte producten aan.

## Uitsluiting van toepassingsgebied

- De ECO-DRAIN kan als condensaatafvoer alleen geen gedefineerde persluchtkwaliteit garanderen. Hiervoor zijn andere aanvullende, technische installaties noodzakelijk.
- De ECO-DRAIN 12 is niet geschikt voor het gebruik bij installaties met onderdruk of atmosferische omgevingsdruk of in ex-zones.
- De ECO-DRAIN mag niet continu worden blootgesteld aan direct zonlicht of warmtestraling.
- De ECO-DRAIN 12 mag niet worden geïnstalleerd en gebruikt in ruimtes met agressieve atmosfeer.

Technische Daten • Technical data
Caractéristiques • Gegevens

Dieses Produkt wurde getestet nach den Anforderungen der CAN/CSA-C22.2 Nr. 61010-1, dritte Auflage, unter Einbeziehung der Ergänzung 1 oder einer späteren Version der gleichen Norm, unter Berücksichtigung des gleichen Niveaus an Testanforderungen.

This product has been tested to the requirements of CAN/CSA-C22.2 No. 61010-1, third edition, including Amendment 1, or a later version of the same standard incorporation the same level of testing requirements.

Ce produit a été testé selon les exigences de la norme CAN/CSA-C22.2 n° 61010-1, troisième édition, en tenant compte du complément 1 ou d'une version plus récente de la même norme, en appliquant le même niveau d'exigences en matière de tests.

Dit product is getest volgens de vereisten van CAN/CSA-C22.2 nr. 61010-1, derde uitgave, inclusief aanvulling 1 of een latere versie van dezelfde norm, rekening houdend met hetzelfde niveau van testvereisten.

| ECO-DRAIN | 12 | 12 CO | 12 CO PN63 |
|---|---|---|---|
| min./max. Betriebsdruck<br>operating pressure, min/max<br>Pression de service min/max<br>Min./max. bedrijfsdruk | 0,8 ... 16 bar<br>(12 ... 230 psi / 0,08 ... 1,6 MPa ) | | 1,2 ... 63 bar<br>(18 ... 913 psi / 0,12 ... 6,3 MPa) |
| min./max. Temperatur<br>min/max temperature<br>Température min/max<br>Min./max. temperatuur | +1 ... +60 °C<br>(+34 ... +140 °F) | | |
| Kondensatzulauf<br>Condensate feed<br>Entrée du condensat<br>Kondensaatinvoer | G ½ / ½ NPT | | |
| Kondensatablauf (Schlauch)<br>Condensate discharge (hose)<br>Sortie du condensat (flexible)<br>Kondensaatafvoer (slang) | G ⅜ | | G ⅜ |
| Kondensat<br>condensate<br>Condensat<br>Kondensaat | ölhaltig<br>oil-contaminated<br>huileux<br>oliehoudend | ölhaltig + ölfrei<br>oil-contaminated + oil-free<br>huileux + non huileux<br>oliehoudend + olievrij | |
| Gehäuse<br>housing<br>Corps<br>Behuizing | Aluminium<br>Aluminium<br>Aluminium<br>Aluminium | Aluminium, hartcoatiert<br>Aluminium, hard-coated<br>Aluminium, avec revêtement dur<br>Aluminium, hardgecoat | |
| Gewicht (leer)<br>weight (empty)<br>Poids (à vide)<br>Gewicht (leeg) | 0,8 kg<br>(1.8 lbs) | | 0,9 kg<br>(2.0 lbs) |

Max. Leistung für Klimazone Blau – siehe auch Kapitel „Klimazone und Leistungsdaten“
Max. performance for the blue climatic zone – see also Chapter "Climatic zone and performance data".
Capacité max. pour la zone climatique Bleu – voir aussi chapitre „Zones climatiques et Capacités“
Max. capaciteit voor klimaatzone blauw - zie ook het hoofdstuk "Klimaatzone en capaciteitsgegevens"

| | |
|---|---|
| max. Kompressorleistung<br>peak compressor performance<br>Capacité maximale du compresseur<br>Max. compressorcapaciteit | 6,5 m³/min<br>(230 cfm) |
| max. Kältetrocknerleistung (nur mit Vorabscheidung)<br>peak refrigeration dryer performance (only with pre-separation)<br>Capacité max. du sécheur frigo (seules avec pré-separation)<br>Max. koeldrogercapaciteit (allen met voorafscheiding) | 13 m³/min<br>(460 cfm) |
| max. Filterleistung (hinter Trockner)<br>peak filter performance (behind dryer)<br>Capacité maximale filtre (derriere sécheur)<br>Max. filtercapaciteit (achter koeldroger) | 65 m³/min<br>(2300 cfm) |

| Elektrische Daten • Electrical data<br>Caractéristiques electrique • Elektrische gegevens | |
|---|---|
| | |
| Betriebsspannung<br>Supply voltage<br>Tension d'alimentation<br>Bedrijfsspanning | 230 / 115 / ... / 24 VAC ± 10%, 50 ... 60 Hz / 24 VDC ± 10%<br>siehe Typenschild / see type plate<br>voir plaque signalétique / zie instructieplaat |
| Leistungsaufnahme<br>Power input<br>Consommation<br>Opgenomen vermogen | P < 8,0 VA (W) |
| Absicherung<br>Fuse protection<br>Fusibles<br>Zekering | empfohlen AC: 1 A träge / vorgeschrieben DC: 1 A träge<br>recommanded AC: 1 A slow / stipulated DC: 1 A slow<br>recomm. AC : 1 A fusion lente / prescrit DC : 1 A fusion lente<br>aanbevolen AC: 1 A traag / specificatie DC: 1 A traag |
| empfohlener Kabelmanteldurchmesser<br>recommanded cable jacket diameter<br>diamètre recommandé pour la gaine du câble<br>anbevolen kabeldoorsnede | ø 5,8 ... 8,5 mm<br>(0.23" ... 0.34") |
| empfohlener Aderquerschnitt (Netzanschluss)<br>recommended wire cross-section<br>Section recommandée pour les conducteurs (alimentation secteur)<br>Aanbevolen draaddoorsnede (netaansluiting) | 3 x 0,75 ... 1,5 mm²<br>(0.03 ... 0.06 inches squared) |
| empfohlenes Absetzen des Kabelmantels<br>recommended stripping of cable jacket<br>Longueur recommandée pour le dénudage de la gaine du câble<br>Aanbevolen strippen van de kabelmantel | PE: ~ 60 mm L/N: ~ 50 mm<br>(PE: ~ 2.3" L/N: ~ 1.96") |
| empfohlene Abisolierlänge<br>recommended wire stripping<br>Longueur recommandée pour le dénudage<br>Aanbevolen isolatielengte | ~ 6 mm<br>(~ 0.24") |
| Anschlussdaten des potenzialfreien Kontaktes<br>Last schalten *)<br>Connection data of the potential-free contact<br>Switch to load *)<br>Caractéristiques de raccordement du contact sans potentiel<br>Commuter une charge *)<br>Aansluitgegevens van het potentiaalvrije contact<br>Last schakelen *) | AC: max. 250 V / 1 A<br>DC: max. 30 V / 1 A |
| Anschlussdaten des potenzialfreien Kontaktes<br>Kleinsignel schalten *)<br>Connection data of the potential-free contact<br>Switch to low signal *)<br>Caractéristiques de raccordement du contact sans potentiel<br>Commuter un petit signal *)<br>Aansluitgegevens van het potentiaalvrije contact<br>Laag signaal schakelen *) | min. 5 VDC / 10 mA |
| Schutzart<br>Protection class<br>Degré de protection<br>Beschermingsklasse | IP 65 |

VAC = V alternating current (Wechselspannung) / VDC = V direct current (Gleichspannung)
*) das Schalten von Lasten führt dazu, dass die Eigenschaften des Kontaktes für das Schalten von Kleinsignalen nicht mehr geeignet sind.

VAC = V alternating current / VDC = V direct current
*) The switching of loads has the result that the properties of the contact are no longer suitable for the switching of low signals.

VAC = V alternating current (Tension alternative) / VDC = V direct current (Tension continue)
*) La commutation de charges a pour conséquence que les propriétés du contact ne conviennent plus pour la commutation de petits signaux.

VAC = V alternating current (wisselstroom) / VDC = V direct current (gelijkstroom)
*) het schakelen van lasten heeft als gevolg dat de eigenschappen van het contact niet meer geschikt zijn voor het schakelen van lage signalen.

ECO-DRAIN 12, 12 CO, 12 CO PN63 **11**

Abmessungen • Dimensions • Dimensions • Afmetingen

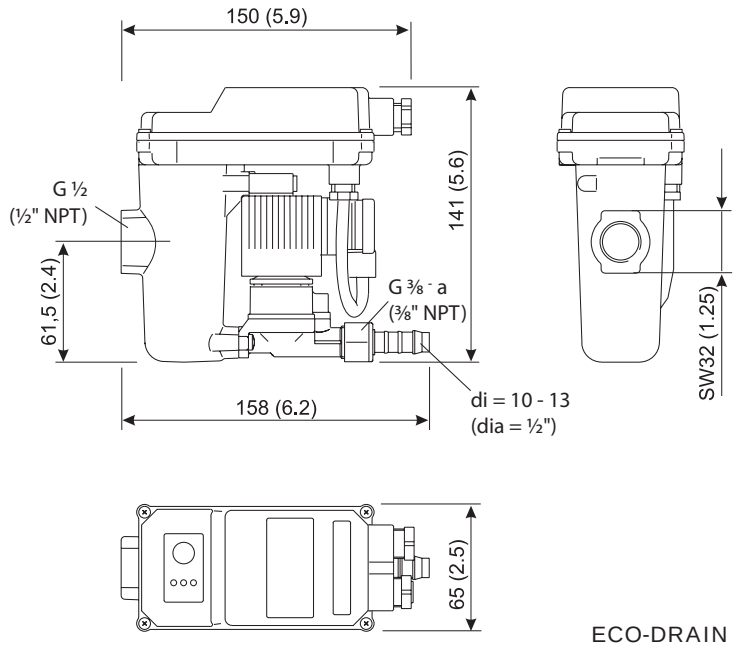


ECO-DRAIN 12
ECO-DRAIN 12 CO

mm (inch)

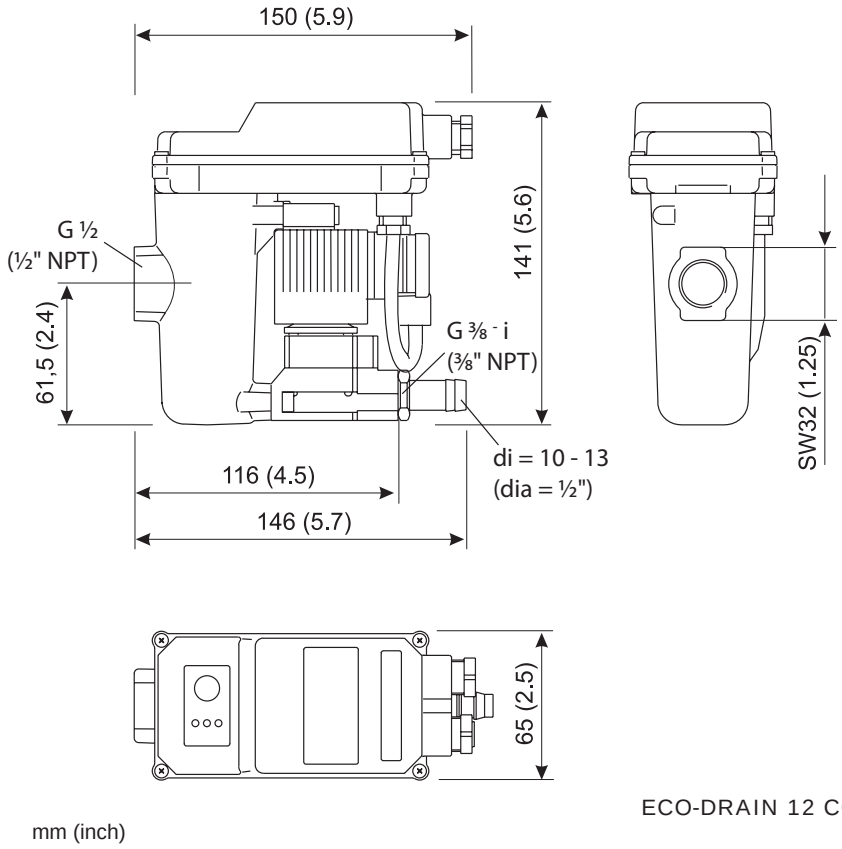


ECO-DRAIN 12 CO PN63

mm (inch)

Klimazonen • Climatic zone • Zones climatiques • Klimaatzone

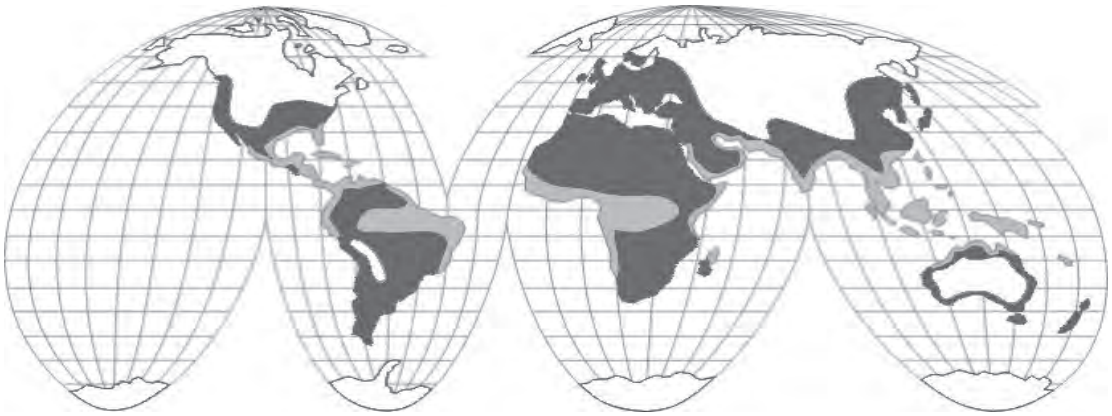

| Klimazone<br>Climatic zone<br>Zone climatique<br>Klimaatzone | Max. Kompressorleistung<br>Peak compressor performance<br>Capacité max. du compresseur<br>Max. compressorcapaciteit | | Max. Trocknerleistung<br>Peak dryer performance<br>Capacité max. du sécheur<br>Max. koeldrogercapaciteit | | Max. Filterleistung<br>Peak filter performance<br>Capacité max. du filtre<br>Max. filtercapaciteit | |
|---|---|---|---|---|---|---|
| | **m³/min.** | **cfm** | **m³/min.** | **cfm** | **m³/min.** | **cfm** |
| grün/green/vert/groen | 8,0 | 283 | 16,0 | 565 | 80,0 | 2825 |
| blau/blue/bleu/blauw | 6,5 | 230 | 13,0 | 459 | 65,0 | 2300 |
| rot/red/rouge/rood | 4,0 | 141 | 8,0 | 283 | 40,0 | 1413 |

Die angegeben Leistungsdaten beziehen sich auf gemäßigtes Klima mit Gültigkeit für Europa, weite Teile Süd-Ost-Asiens, Nord- und Südafrika, Teile Nord- und Südamerikas (Klimazone: Blau).

Für trockenes und/oder kühles Klima (Klimazone: Grün) gilt folgender Faktor:
Leistung in Klimazone “Blau” ca. x 1,2

Für warmes und/oder feuchtes Klima (Tropen; Klimazone: Rot) gilt folgender Faktor:
Leistung in Klimazone “Blau” ca. x 0,7

The compressor capacity figures relate to mild climate valid for Europe, large parts of South-East Asia, Nothern Africa, parts of North- and South America (climate zone: Blue)

For dry and/or cold climate (climate zone: Green),
multiply the Blue zone figure with the following correction factor: approx. 1.2

For warm and/or wet climate (climate zone: Red),
multiply the Blue zone figure with the following correction factor: approx. 0.7

Les capacités indiquées se rapportent à un climat tempéré, valable pour l‘Europe, certaines parties du Sud-Est asiatique, l‘Afrique du Nord et du Sud, certaines parties de l‘Amérique du Nord et du Sud (zone climatique: bleu).

Pour un climat sec et/ou frais (zone climatique: vert), il convient d‘appliquer le facteur suivant :
Capacité en zone climatique “bleu” environ x 1,2

Pour un climat chaud et/ou humide (zones tropicales; zone climatique: rouge), il convient d‘appliquer le facteur suivant:
Capacité en zone climatique “bleu” environ x 0,7

De aangegeven capaciteitsgegevens hebben betrekking op een gematigd klimaat en zijn geldig voor Europa, grote delen van Zuidoost-Azië, Noord- en Zuid-Afrika, delen van Noord- en Zuid-Amerika (klimaatzone: blauw).

Voor droog en/of koel klimaat (klimaatzone: groen) geldt de volgende factor:
vermogen in klimaatzone blauw ca. x 1,2

Voor warm en/of vochtig klimaat (de tropen; klimaatzone: rood) geldt de volgende factor:
vermogen in klimaatzone blauw ca. x 0,7

| Funktion • Function<br>Fonctionnement • Functiebeschrijving | deutsch |
|---|---|

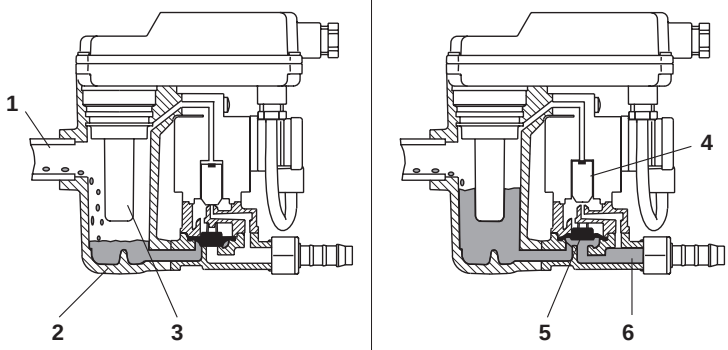


Das Kondensat strömt über die Zulaufleitung (1) in den ECO-DRAIN und sammelt sich im Gehäuse (2). Ein kapazitiv arbeitender Sensor (3) erfasst permanent den Füllstand und gibt ein Signal an die elektronische Steuerung sobald sich der Behälter gefüllt hat. Das Vorsteuerventil (4) wird betätigt und die Membrane (5) öffnet zur Kondensatausschleusung die Ablaufleitung (6).

Ist der ECO-DRAIN geleert, wird die Ablaufleitung rechtzeitig wieder dicht verschlossen, bevor unnötige Druckluftverluste entstehen können.

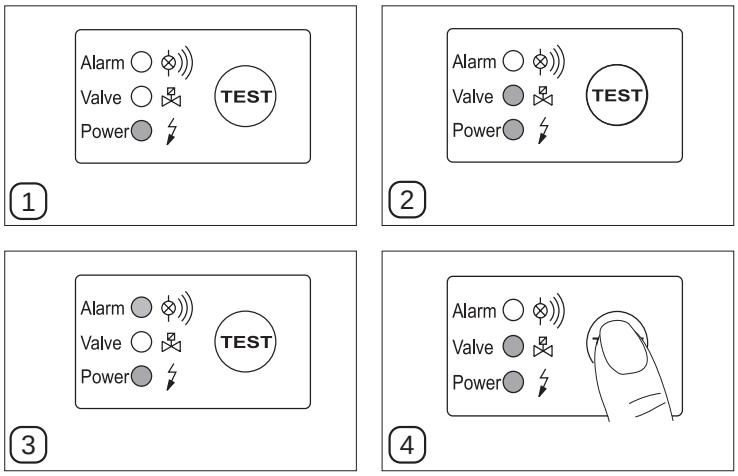


1 Betriebsbereitschaft
Spannung liegt an

2 Ableitvorgang
Ablaufleitung ist geöffnet

3 Störung
Alarmmodus ist aktiviert

4 Test
manuelle Entwässerung/Alarm

Der Test-Taster dient zur Funktionskontrolle.

| Betätigung | Wirkung |
|---|---|
| ca. 2 sek. | manuelle Entwässerung |
| > 1 min | Alarmmodus |

Schaltfolge des Ventils im Alarmmodus
Switching sequence of valve in alarm mode
Séquence d'activation de la vanne en mode Alarme
Schakelvolgorde van het ventiel tijdens alarmfase

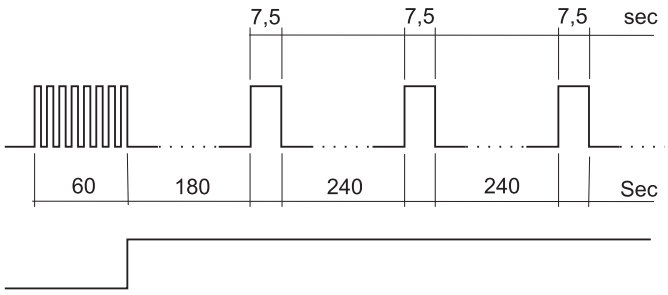


Alarmmeldung über potentialfreien Kontakt
Alarm signal via potential-free contact
Signal d'alarme délivré sur le contact sans potentiel
Alarmmelding via het potentiaalvrij contact

Stellt der Mikrocontroller eine Betriebsstörung fest, wird der Alarmmodus ausgelöst. Die Schaltfolge des Ventils (siehe Bild) dauert so lange an, bis die Ursache der Störung behoben ist (selbsttätig oder durch Wartung). Die rote LED **blinkt** während der Alarmfunktion.

Mögliche Störungsursachern sind z.B.:
- Fehler in der Installation
- Unterschreiten des Minimaldruckes
- zu hoher Kondensatanfall (Überlast)
- verstopfte/gesperrte Ablaufleitung
- extreme Schmutzpartikelmenge
- eingefrorene Rohrleitungen

Ist die Störung nicht innerhalb der ersten Minute behoben, wird eine Störmeldung ausgelöst (siehe Bild), die als potentialfreies Signal über das Alarmrelais abgegriffen wer den kann.

## english

The condensate flows through the feed line (1) into the ECO-DRAIN unit and accumulates in the container (2). A capacitive sensor (3) continuously registers the liquid level and passes a signal to the electronic control as soon as the container is filled. The pilot valve (4) is then activated and the diaphragm (5) opens the outlet line (6) for discharging the condensate.

When the ECO-DRAIN unit has been emptied, the outlet line is closed again quickly and tightly without wasting compressed air.

1 Ready for operation
Voltage is being applied

2 Discharge procedure
Outlet line is open

3 Malfunction
Alarm mode is activated

4 Test
Manual drainage/alarm

The test button is used for checking correct functioning.

| Pressing | Effect |
|---|---|
| approx. 2 sec | Manual drainage |
| > 1 min | Alarm mode |

When the microcontroller registers a malfunction, the device will automatically change to the alarm mode. The switching sequence of the valve (see illustration) continues until the fault is cleared (automatically or through maintenance). The red LED **flashes** as long as the device is in the alarm mode.

Malfunctioning could be caused by, e.g.:
- Mistakes during installation
- Dropping below the necessary minimum pressure
- Excessive condensate quantities (overloading)
- Blocked/shut off outlet line
- Extreme amount of dirt particles
- Frozen piping

If the fault is not cleared within the first minute, a fault signal is triggered (see illustration) which can be picked off as a potential-free signal via the alarm relay.

## français

Amené dans le ECO-DRAIN par la conduite d'arrivée (1), le condensat est collecté dans le réservoir (2). Une sonde capacitive (3) surveille en permanence le niveau de remplissage et envoie un signal à la commande électronique dès que le réservoir est rempli. L'électrovanne pilote (4) est activée et la membrane (5) ouvre la conduite d'évacuation (6) pour l'éclusage du condensat.

Dès que le ECO-DRAIN est vide, la conduite d'évacuation est à nouveau refermée avec une parfaite étanchéité, avant même que l'air comprimé ne puisse s'échapper.

1 Prêt à fonctionner
Tension d'alimentation présente

2 Phase de purge
Conduite d'évacuation ouverte

3 Dysfonctionnement
Mode Alarme activé

4 Test
Purge manuelle/Alarme

La touche Test sert à tester le fonctionnement.

| Action | Effet |
|---|---|
| environ 2 sec | Purge manuelle |
| > 1 min | Mode Alarme |

Lorsque le microcontrôleur détecte une anomalie, il active le mode alarme. La séquence d'activation de la vanne (voir figure) persiste jusqu'à ce que le problème soit résolu (automatiquement ou par intervention de maintenance). La LED rouge **clignote** pendant la fonction d'alarme.

Causes de dysfonctionnement possibles:
- Défaut au niveau de l'installation
- Pression minimale non atteinte
- Trop de condensat (surcharge)
- Ecoulement bouché ou obturé
- Importantes quantités d'impuretés
- Conduites gelées

Si la panne n'est pas résolue en l'espace d'une minute, un signal d'alarme est émis (voir figure). Un signal sans potentiel est délivré par le relais d'alarme.

## nederlands

Het kondensaat stroomt door de toevoerleiding (1) in de ECO-DRAIN en verzamelt zich in het reservoir (2). De capacitieve sensor (3) registreert permanent het kondensaatniveau en geeft een signaal aan de elektronica, zodra het reservoir gevuld is. De ventieleenheid (4) treedt hierdoor in werking en het membraan (5) wordt omhoog gedrukt. Het kondensaat kan hierdoor in de afvoerleiding (6) stromen.

Als het reservoir van de ECO-DRAIN geleegd is, wordt de afvoer weer gesloten, voordat er onnodig verlies van dure perslucht kan plaats vinden.

1 Bedrijfsklaar, de ECO-DRAIN staat onder spanning

2 Afvoerproces
De afvoerleiding is geopend

3 Storing
De alarmfase is geactiveerd

4 Test
Handmatige afvoer/alarm

De testschakelaar dient ter functiecontrole.

| Activiteit | Werking |
|---|---|
| ca. 2 sec | handmatige afvoer |
| > 1 min | alarmfase |

Indien de microprocessor een storing vaststelt, wordt de alarmfase in werking gesteld. De schakelvolgorde van het ventiel (zie afbeelding) duurt voort, zo lang tot de storing is opgelost (zelfstandig of door onderhoud). Gedurende de alarmfase **knippert** de rode LED.

Mogelijke storingsoorzaken zijn b.v.:
- Een installatiefout
- De werkdruk ligt onder de min. druk
- Overbelasting (te veel kondensaat)
- Verstopte/afgesloten afvoerleiding
- Extreme hoeveelheden vuildeeltjes
- Bevroren leidingen

Indien de storing niet binnen een minuut is verholpen, wordt een storing gemeld (zie afbeelding). Deze kan als potentiaalvrij signaal via het alarmrelais aan een centraal meldpunt worden doorgegeven.

Installation

**Gefahr!**
**Druckluft!**
**Durch Kontakt mit schnell oder schlagartig entweichender Druckluft oder durch berstende und/oder nicht gesicherte Anlagenteile besteht Gefahr schwerer Verletzungen oder Tod.**

**Maßnahmen:**

- Max. Betriebsdruck nicht überschreiten (siehe Typenschild).
- **Wartungsarbeiten nur im drucklosen Zustand durchführen.**
- Nur druckfestes Installationsmaterial verwenden.
- Zulaufleitung fest verrohren. Ablaufleitung: kurzer, fixierter Druckschlauch an druckfestem Rohr.
- Verhindern Sie, dass Personen oder Gegenstände von Kondensat oder entweichender Druckluft getroffen werden können.

**Vorsicht!**
**Fehlfunktionen in der Anwendung!**
**Durch fehlerhafte Installation und mangelhafte Wartung kann es zu Fehlfunktionen am ECO-DRAIN kom men. Nicht abgeleitetes Kondensat kann zu Schäden an Anlagen und in Fertigungsprozessen führen.**

**Maßnahmen:**

- Eine funktionssichere Kondensatableitung optimiert direkt die Druckluftqualität.
- Zur Vermeidung von Schäden und Ausfällen bitte unbedingt beachten:
  - genaues Einhalten der bestimmungsgemäßen Verwendung und der Betriebsparameter des ECO-DRAIN im Zusammenhang mit dem Einsatzfall (siehe dazu Kapitel „Bestimmungsgemäße Verwendung“)
  - genaues Einhalten der Installations- und Betriebshinweise in dieser Anleitung
  - regelmäßige Wartung und Kontrolle des ECO-DRAIN nach den Hinweisen in dieser Betriebsanleitung

**Hinweis:**

Beachten Sie unbedingt alle aufgeführten Gefahren- und Warnhinweise.

Beachten Sie auch alle Vorschriften und Hinweise des Arbeits- und Brandschutzes am jeweiligen Installationsort.

Verwenden Sie grundsätzlich nur geeignetes und passendes Werkzeug und Material in ordnungsgemäßem Zustand.

Verwenden Sie keine aggressiven Reinigungsmittel und ungeeignete Geräte, wie Hochdruckreiniger.

Beachten Sie, dass Kondensate aggressive und gesundheitsschädigende Bestandteile enthalten können. Deshalb sollte ein Hautkontakt vermieden werden.

Kondensat ist ein entsorgungspflichtiger Abfall, welcher in geeigneten Behältern aufgefangen, entsorgt oder aufbereitet werden muss.

## Installation

**Danger!**
**Compressed air!**
**Risk of serious injury or death through contact with quickly or suddenly escaping compressed air or through bursting plant components or plant components which are not secured.**

**Measures:**

- Do not exceed the maximum operating pressure (see type plate)!
- **Only carry out service measures when the system is pressureless.**
- Use pressure-resistant installation material only.
- The feed pipe must be tubed firmly. Discharge pipe: short, fixed pressure hose onto pressure-resistant pipe.
- Make sure that persons or objects cannot be hit by condensate or escaping compressed air.

**Caution!**
**Malfunctions in the application!**
**Through incorrect installation and insufficient maintenance, the ECO-DRAIN can malfunction. Condensate which is not discharged can lead to damage to plants and in manufacturing processes.**

**Measures:**

- Fail-safe condensate discharge directly optimises the compressed-air quality.
- To prevent damage and failures, it is imperative
  - To comply with the provisions regarding proper use and with the operating parameters of the ECO-DRAIN in connection with the case of application (see chapter "Proper use").
  - To strictly adhere to the installation and operating advice in these instructions.
  - To maintain and check the ECO-DRAIN at regular intervals in accordance with the advice in these operating instructions.

**Note:**

It is imperative to observe all hazard statements and warnings listed here.

Please also observe all regulations and notes regarding the industrial safety and fire prevention at the respective place of installation.

As a matter of principle, only use suitable and appropriate tools and materials in a proper condition.

Do not use aggressive cleaners and improper devices such as high-pressure cleaners.

Please note that condensates may contain aggressive or harmful components. Therefore, skin contact should be avoided.

Condensate is subject to mandatory waste disposal and must be collected in suitable

containers, and disposed of or processed properly.

Installation

**Danger !**
**Air comprimé !**
**Tout contact avec de l'air comprimé s'échappant rapidement ou de façon brutale ou tout contact avec des parties de l'installation présentant un risque d'éclatement peut causer de graves blessures ou entraîner la mort.**

**Mesures préventives :**

- Ne pas dépasser la pression de service maximale (voir plaque signalétique).
- **Dépressuriser le purgeur avant toute intervention d'entretien ou de maintenance.**
- N'utiliser que du matériel d'installation résistant à la pression.
- La conduite d'amenée doit toujours être réalisée en tuyauterie rigide et fixe. Conduite d'évacuation : flexible de faible longueur, fixé et relié à une tuyauterie, tous deux résistant à la pression.
- Veillez à ce qu'aucune personne ni objet ne risque d'être touché par le condensat ou l'air comprimé qui s'échappe.

**Prudence !**
**Dysfonctionnements au niveau de l'utilisation !**
**En cas d'installation incorrecte et de maintenance insuffisante, des dysfonctionnements peuvent apparaître au niveau du ECO-DRAIN.**
**Tout condensat non évacué risque d'endommager les installations et de porter atteinte aux processus de fabrication.**

**Mesures préventives :**

- Le bon fonctionnement de la purge des condensats permet une optimisation directe de la qualité de l'air comprimé.
- Pour éviter tout endommagement et tout arrêt de production, il est impératif de respecter les consignes suivantes :
  - Respecter scrupuleusement les instructions pour une utilisation conforme à l'usage prévu et les paramètres de fonctionnement du ECO-DRAIN dans le contexte de son utilisation (consulter à cet effet le chapitre „Utilisation conforme à l'usage prévu").
  - Respecter scrupuleusement toutes les instructions d'installation et d'utilisation communiquées dans cette notice.
  - Respecter scrupuleusement la périodicité de maintenance et de contrôle du ECO-DRAIN selon les indications de ce manuel d'utilisation.

**Remarque :**

Respectez impérativement toutes les informations relatives à un danger ou à un avertissement.

Respectez également toutes les prescriptions et consignes de sécurité relatives à la protection des travailleurs et à la protection incendie en vigueur au lieu d'installation en question.

Utilisez toujours l'outillage et le matériel appropriés et en bon état.

N'utilisez aucun produit de nettoyage agressif, ni d'appareils inadaptés, par exemple les nettoyeurs haute pression.

Notez bien que les condensats peuvent contenir des composants agressifs et néfastes pour la santé. C'est pourquoi, il est recommandé d'éviter tout contact avec la peau.

Les condensats sont soumis à la réglementation sur les déchets. Ils doivent être collectés dans des récipients appropriés, éliminés ou recyclés.

Installatie

**Gevaar!**
**Perslucht!**
**Contact met perslucht die snel of abrupt ontsnapt of wegspringende en/of niet beveiligde delen van de installatie leveren gevaar op met zwaar letsel of dood tot gevolg.**

**Maatregelen:**

- Overschrijd de maximale bedrijfsdruk niet (zie instructieplaat).
- **Verricht onderhoudswerkzaamheden uitsluitend in drukloze toestand.**
- Gebruik uitsluitend drukbestendig installatiemateriaal.
- Verbind de toevoerleiding vast met het buizensysteem. Afvoerleiding: bevestig een korte hogedrukslang aan de drukbestendige buis.
- Voorkom dat personen of voorwerpen geraakt kunnen komen door condensaat of ontsnappende perslucht.

**Let op!**
**Storingen tijdens het gebruik!**
**Er kunnen storingen aan de ECO-DRAIN ontstaan als gevolg van een foutieve installatie en gebrekkig onderhoud.**
**Niet afgevoerd condensaat kan schade veroorzaken aan installaties en in productieprocessen.**

**Maatregelen:**

- Een veilig functionerende condensaatafvoer optimaliseert direct de persluchtkwaliteit.
- Neem het volgende absoluut in acht om schade en uitval te voorkomen:
  - Correct opvolgen van de instructies voor doelmatig gebruik en van de bedrijfsparameters van de ECO-DRAIN afhankelijk van de gebruikssituatie (zie hiervoor hoofdstuk "Doelmatig gebruik")
  - Correct opvolgen van de installatie- en bedrijfsinstructies in deze handleiding
  - Regelmatig onderhoud en controle van de ECO-DRAIN volgens de instructies in deze gebruiksaanwijzing

**Opmerking:**

Neem alle opgesomde gevaar- en waarschuwingsinstructies absoluut in acht.

Neem ook alle voorschriften en instructies in acht in verband met de arbeidsomstandigheden en brandveiligheid op de respectievelijke installatieplek.

Gebruik in principe alleen maar geschikt en passend gereedschap en materiaal dat in goede staat is.

Gebruik geen aggressieve reinigingsmiddelen en ongeschikte apparaten zoals hogedrukreinigers.

Let op! Condensaat kan agressieve bestanddelen bevatten die schadelijk kunnen zijn voor de gezondheid. Daarom moet contact met de huid worden vermeden.

Condensaat is afval dat verwijderd moet worden en in geschikte containers moet worden opgevangen, verwijderd of behandeld.

| Installation • Installation<br>Installation • Installatie | | deutsch |
|---|---|---|
| 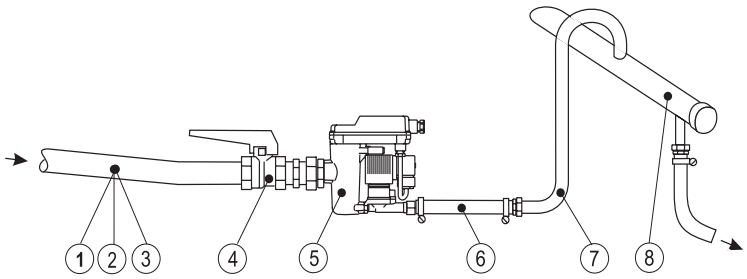 | | 1. Zulaufrohr und Fitting mind. ½" (Innendurchmesser ≥13 mm (0.5"))!<br>2. Keine Filter im Zulauf!<br>3. Gefälle im Zulauf >1% !<br>4. Nur Kugelventile verwenden!<br>5. Druck: mind. 0,8 bar (12 psi) bzw. 1,2 bar (18 psi)! Druck auf Typenschild ablesen.<br>6. Kurzer Druckschlauch!<br>7. Pro Meter Steigung in der Ablaufleitung, erhöht sich der erforderliche Mindestdruck um 0,1 bar (1.5 psi)! Ablaufleitung max. 5 m (17 feet) steigend!<br>8. Sammelleitung mind. ½" mit 1% Gefälle verlegen!<br>9. Bei Zulaufproblemen Entlüftungsleitung installieren. |
| falsch • wrong<br>incorrect • onjuist | richtig • correct<br>correct • juist | |
| 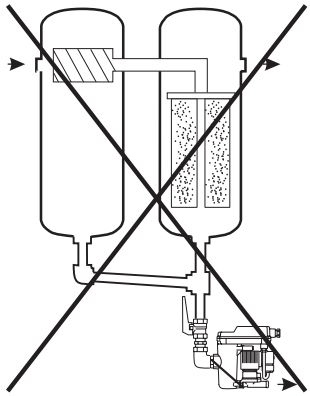 | 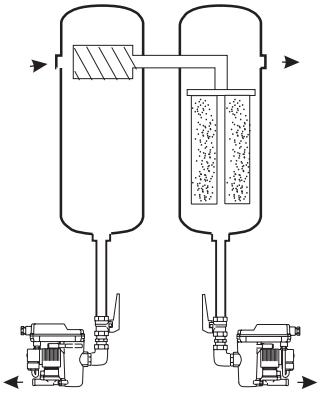 | **Beachten:**<br>**Druckdifferenzen!**<br>Jede Kondensatanfallstelle muss separat entwässert werden! |
| 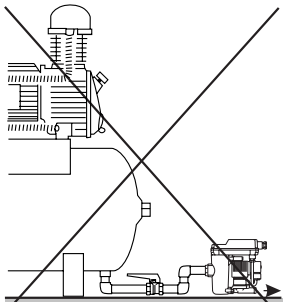 | 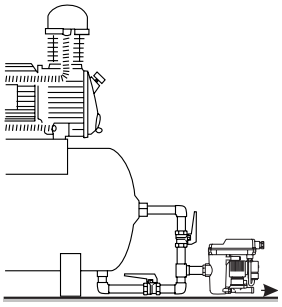 | **Beachten:**<br>**Entlüftung!**<br>Bei nicht ausreichendem Gefälle im Zulauf oder anderen Zulaufproblemen muss eine Luftausgleichsleitung verlegt werden! |
| 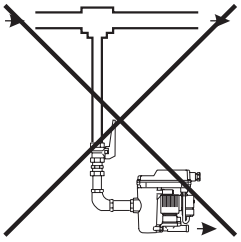 | 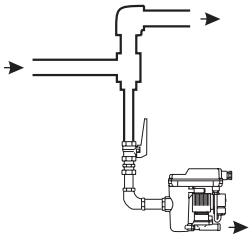 | **Beachten:**<br>**Prallfläche!**<br>Soll aus der Leitung direkt entwässert werden, ist eine Umlenkung des Luftstromes sinnvoll! |

| english | français | nederlands |
|---|---|---|
| 1. Feed pipe and fitting at least ½"! (Inner diameter ≥13 mm (0.5"))<br>2. No filters in feed line<br>3. Slope in feed line > 1%!<br>4. Only use ball valves!<br>5. Pressure: min. 0.8 bar (12 psi) or 1.2 bar (18 psi)! Check type plate for correct pres-sure.<br>6. Short pressure hose!<br>7. For each metre of rising slope in the outlet line, the required minimum pressure will increase by 0,1 bar (1.5 psi). The rise of the outlet line must not exceed 5 metres (17 feet)!<br>8. Collecting line min. ½'' with 1% slope<br>9. In the case of inflow problems, install venting line. | 1. Tube d'amenée, au moins ½" ! (Diamètre intérieur ≥13 mm (0.5"))<br>2. Pas de filtre sur l'amenée !<br>3. Pente de l'amenée >1% !<br>4. Utiliser uniquement des vannes à boisseau sphérique !<br>5. Pression : minimum 0,8 bar (12 psi) ou 1,2 bar (18 psi) ! Relever la pression sur la plaque.<br>6. Flexible pression de faible longeur!<br>7. Pour chaque mètre de pente montante sur la conduite d'évacuation, il faut augmenter la pression minimale requise de 0,1 bar (1.5 psi)! Evacuation: longueur max. de la partie montante : 5 m (17 feet) !<br>8. Conduite collectrice : au minimum ½" avec 1% de pente!<br>9. La conduite d'écoulement doit être raccordée par un col de cygne sur la conduite collectrice | 1. Toevoerleiding en fittingen minstens ½"! (Doorlaat diameter ≥13 mm (0.5"))<br>2. Geen filter in toevoerleiding monteren!<br>3. Toevoerleiding met verval monteren >1%!<br>4. Alleen kogelafsluiters gebruiken!<br>5. Druk: minimaal 0,8 bar (12 psi) resp. 1,2 bar (18 psi)! Druk is vermeld op typeplaatje<br>6. Korte hogedrukslang!<br>7. Per meter stijging in de afvoerleiding wordt de noodzakelijke minimumdruk verhoogd met 0,1 bar (1.5 psi)! Afvoerleiding max. 5 m (17 feet) omhoog-voeren!<br>8. Verzamelleiding minimaal ½" met minimaal 1% verval aanleggen!<br>9. By problemen met aanvoer drukvereftening installeren. |
| **Note:**<br>**Pressure differences!**<br>Each condensate source must be drained separately! | **Important :**<br>**différences de pression !**<br>Chaque point de soutirage de condensat doit être purgé individuellement pour éviter le by-pass. Une purge continue ne serait plus possible dans ces conditions ! | **Belangrijk:**<br>**Let op drukverschillen!**<br>Ieder afvoerpunt apart draineren.<br>Het drukverschil tussen de afvoerpunten zorgt in de kondensaatafvoerleiding voor een by-pass stroming. |
| **Note:**<br>**Venting!**<br>If the feed line cannot be laid with sufficient slopeor if there are other inflow problems, it will be necessary to install a venting line! | **Important :**<br>**équilibrage d'air !**<br>Si la pente de l'amenée n'est pas suffisante, il faut poser une conduite d'équilibrage d'air ! | **Belangrijk:**<br>**Ontluchten!**<br>Indien de toevoerleiding niet op afschot is gemonteerd of andere aanvoerproblemen, moet voor de toevoer een aparte ontluchtingsleiding worden geïnstalleerd. |
| **Note:**<br>**Deflector area!**<br>If drainage is to take place directly from a line, it is advisable to arrange the piping so that the air flow is diverted. | **Important :**<br>**chicane !**<br>Si la purge doit s'effectuer directement sur la tuyauterie, il faut prévoir une chicane pour que le condensat ne soit pas entrainé par le débit d'air comprimé ! | **Belangrijk:**<br>**Diepste punt!**<br>Bij directe drainage in het leiding-systeem moet de ECO-DRAIN altijd op het diepste punt geïnstalleerd worden. Wij adviseren hiervoor een broekstuk te gebruiken. |

| Installation • Installation<br>Installation • Installatie | | deutsch |
|---|---|---|
| | | |
| falsch • wrong<br>incorrect • onjuist | richtig • correct<br>correct • juist | |
| 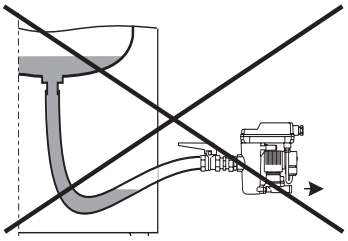 | 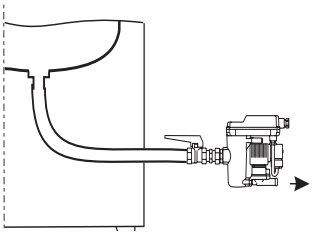 | **Beachten:**<br>**kontinuierliches Gefälle!**<br>Wird ein Druckschlauch als Zulauf verwendet, Wassersack vermeiden! |
| 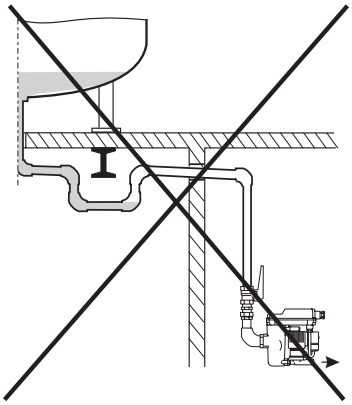 | 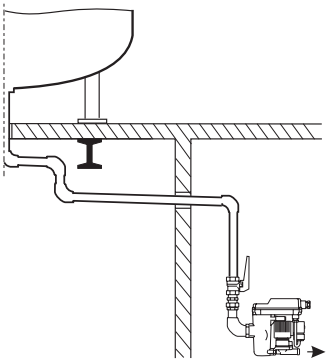 | **Beachten:**<br>**kontinuierliches Gefälle!**<br>Auch bei Verrohrung der Zulaufleitung, Wassersack vermeiden. |

| english | français | nederlands |
|---|---|---|
| | | |
| | | |
| **Note:**<br>**Continuous slope**<br>It is important to avoid water pockets when using a pressure hose as a feed line! | **Important :**<br>**pente continue !**<br>Si l'amenée est réalisée au moyen d'un flexible, il faut éviter toute "retenue d'eau" ! | **Belangrijk:**<br>**Op afschot monteren!**<br>Wanneer een slang als toevoerleiding gebruikt wordt, mag er in geen geval een waterslot ontstaan! |
| **Note:**<br>**Continuous slope!**<br>Water pockets must also be avoided when laying a feed pipe. | **Important :**<br>**pente continue !**<br>Si l'amenée est réalisée au moyen d'une tuyauterie rigide, il faut aussi éviter toute "retenue d'eau" ! | **Belangrijk:**<br>**Continue verval!**<br>Ook bij het aanleggen van de afvoerleiding een waterslot vermijden. |

Elektrische Installation

**Gefahr!**
**Netzspannung!**
**Durch Kontakt mit Netzspannung führenden nicht isolierten Teilen besteht Gefahr eines elektrischen Schlages mit Verletzung und Tod.**

**Maßnahmen:**

- Bei elektrischer Installation alle geltenden Vorschriften einhalten (z.B. VDE 0100 / IEC 60364).
- **Wartungsarbeiten nur im spannungsfreien Zustand durchführen.**
- Alle elektrischen Arbeiten dürfen nur von befugtem Fachpersonal durchgeführt werden.

- **Bei AC-Versorgung muss in der Nähe eine zugängliche Trennvorrichtung vorgesehen werden (z.B. Netzstecker oder Schalter), der alle stromführenden Leiter trennt.**
- **Führt der potenzialfreie Kontakt berührungsgefährliche Spannungen, so ist auch hierfür eine entsprechende Trennvorrichtung vorzusehen.**
- Die bereitgestellte Spannung 24 VDC muss die Anforderungen für Funktionskleinspannungen mit sicherer Trennung (PELV) nach IEC 60364-4-41 erfüllen.

**Hinweis:**

Zwischen Anschlussklemmen KL 5 "±24 VDC" - KL 6 "±24 VDC" der VDC-Geräte und Gehäuse bzw. Kondensatanschlüssen besteht keine galvanische Trennung.

Bei Prüfungen, z.B. Schutzleiterprüfungen gemäß VDE 0701-0702 / IEC 85/361/CD, ist zu beachten, dass zwischen den berührbaren leitfähigen Teilen des Gerätes und dem Schutzleiterstützpunkt nur eine Verbindung zur Herstellung einer Funktionserdung und keine stromtragfähige Schutzverbindung besteht.

Die Kabelverschraubung leicht dichtend anziehen.

**Potenzialfreier Kontakt**

Über den potenzialfreien Kontakt kann das Alarmsignal weitergeleitet werden (z.B. an einen Leitstand). Der Umschaltkontakt kann z.B. im **Fail-safe-Modus** betrieben werden:

Liegt Betriebsspannung an und arbeitet der ECO-DRAIN störungsfrei ist das Alarmrelais angezogen. Der Arbeitskontakt (0.7 - 0.8) ist geschlossen.

Liegt keine Betriebsspannung an oder erfolgt eine Störmeldung fällt das Alarmrelais ab. Der Arbeitskontakt ist offen (Alarm).

**Externer Test-Taster (optional)**
Damit kann ferngesteuert vorhandenes Kondensat gezielt abgeleitet werden. Die normale Test-Taster-Funktion ist hier zusätzlich aus dem ECO-DRAIN herausgeführt. Wird der externe Kontakt geschlossen, öffnet das Ventil.
Zusätzliche Anleitung beachten!

**Zwischen dem Schutzleiter-/PE-Anschluss und dem Rohrnetz ist keine Potenzialdifferenz zulässig. Gegebenenfalls ist ein Potenzialausgleich gemäß VDE 0100 / IEC 60364 vorzusehen.**

Elektrical Installation

**Danger!**
**Supply voltage!**
**There is the risk of an electric shock involving injury or death when coming into contact with non-insulated components carrying supply voltage.**

**Measures:**

- During electric installations, all regulations in force need to be adhered to (e.g. VDE 0100 / IEC 60364).
- **Service measures must only be undertaken when the system is deactivated!**
- All types of electrical work must be carried out by authorised and qualified personnel only.

- **At an AC supply, a reliably accessible separator must be provided close-by (e.g. power plug or switch), which separates all current-carrying conductors**
- **If the potential-free contact carries voltage that is dangerous in the case of contact, a corresponding separator must also be provided.**
- The provided 24 VDC voltage must meet the requirements for protective extra-low voltages (PELV) in accordance with IEC 60364-4-41.

**Note:**

Between terminals KL 5 "±24 VDC" and KL 6 "±24 VDC" of the VCD devices and housings or condensate connections, there is no galvanic isolation.

As regards tests, for example protective conductor tests in accordance with VDE 0701-0702 / IEC 85/361/CD, it must be observed that there is only a connection for the establishment of a functional earthing between the touchable conductive parts of the device and the protective conductor base, and no protective connection capable of carrying current.

Tighten the threaded cable connection with a slightly sealing effect.

**Potential-free contact**

Via the potential-free contact, the alarm signal can be transmitted (i.e. to a control system). The switch-over contact can be operated in the **fail-safe mode**.

For example, if supply voltage is applied and if the ECO-DRAIN functions trouble-free, the alarm relay is activated. The normally-open contact (0.7-0.8) is closed.

If no supply voltage is applied or if a trouble indication occurs, the alarm relay is released. The normally-open contact is open (alarm).

**External test button (optional)**
With this button, accumulated condensate can be discharged systematically via remote control. Here, the normal test-button function is additionally led out of the ECO-DRAIN. When the external contact is closed, the valve opens. Observe the additional instructions!

**Between the protective conductor/PE connection and the piping, a potential difference is not admissible. If required, potential equalisation in accordance with VDE 0100 / IEC 60364 must be provided for.**

Installation électrique

**Danger !**
**Tension électrique !**
**Tout contact avec des éléments non isolés et sous tension présente un risque de choc électrique pouvant provoquer des blessures ou entraîner la mort.**

**Mesures préventives :**

- Lors de la réalisation de l'installation électrique, respecter toutes les prescriptions en vigueur (p. ex. VDE 0100 / IEC 60364).
- **Avant toute intervention d'entretien ou de maintenance, mettre le purgeur HORS TENSION.**
- Toute intervention électrique doit être réalisée exclusivement par un personnel qualifié et habilité.
- **En cas d'alimentation en courant alternatif CA, il est impératif de prévoir à proximité un dispositif de sectionnement accessible (par ex. une fiche secteur ou un interrupteur), qui coupe tous les conducteurs véhiculant le courant électrique.**
- **Si le contact sans potentiel véhicule des tensions électriques dangereuses en cas de contact, il est impératif de prévoir un dispositif de sectionnement, comme décrit plus haut.**
- La tension continue de 24 VDC mise à disposition doit répondre aux exigences pour les Très Basses Tensions de Protection (T.B.T.P.) avec séparation sécurisée par rapport à la tension secteur (PELV = Protection by Extra Low Voltage) selon la norme IEC 60364-4-41.

**Remarque :**

Entre les bornes KL 5 "±24 VDC" - KL 6 "±24 VDC" des appareils VDC et le corps ou les raccords des conduites de condensat, il n'y a pas d'isolation galvanique.

Lors des vérifications, par ex. les tests du conducteur de protection selon VDE 0701-0702 / IEC 85/361/CD, il faut veiller à ce que – entre les éléments conducteurs et accessibles de l'appareil et le point d'appui du conducteur de protection – il n'y ait qu'une liaison permettant de réaliser une mise à la terre fonctionnelle et non une liaison de protection capable de véhiculer un courant.

Serrer légèrement le presse-étoupe de façon à assurer l'étanchéité.

**Contact sans potentiel**

Le contact sans potentiel peut être utilisé pour réaliser un report d'alarme (par exemple, vers un système de supervision ou de télésurveillance). Le contact inverseur peut être exploité par exemple en **mode fail-safe** (sécurité positive) :

Si la tension de service est présente et si le ECO-DRAIN fonctionne normalement, le relais d'alarme est excité. Le contact de travail (7 - 8) est fermé.

Si la tension d'alimentation n'est pas présente ou si un signal d'alarme est émis, le relais d'alarme est désexcité. Le contact de travail est ouvert (Alarme).

**Bouton Test externe (en option)**
Celui-ci permet de commander à distance, au moment voulu, la purge du condensat collecté. La fonction normale du bouton Test est ainsi reportée du ECO-DRAIN vers un contact externe. Lorsque ce contact est fermé, la vanne s'ouvre.
Suivre les instructions de la notice séparée !

**Aucune différence de potentiel n'est admissible entre la borne PE du conducteur de protection et le réseau de conduites. Le cas échéant, il faut prévoir une liaison équipotentielle selon VDE 0100 / IEC 60364.**

Elektrische installatie

**Gevaar!**
**Netspanning!**
**Contact met niet-geïsoleerde delen die de netspanning voeren, levert gevaar op door elektrische schok met letsel en dood tot gevolg.**

**Maatregelen:**

- Volg bij elektrische installatie alle geldende voorschriften op (bijv. VDE 0100 / IEC 60364).
- **Verricht onderhoudswerkzaamheden uitsluitend in drukloze toestand.**
- Alle elektrische werkzaamheden mogen uitsluitend worden uitgevoerd door bevoegd vakpersoneel.

- **Bij de wisselstroomvoeding moet een toegankelijke scheidingsinrichting binnen handbereik worden voorzien (bijv. netsnoer of schakelaar) die alle stroomgeleiders van elkaar scheidt.**
- **Als het potentiaalvrije contact tot spanningen leidt die aanrakingsgevaar opleveren, dan moet hiervoor ook een geschikte scheidingsinrichting worden voorzien.**
- De opgebrachte spanning 24 VDC moet voldoen aan de eisen voor functionele laagspanning met veilige scheiding (PELV) volgens IEC 60364-4-41.

**Opmerking:**

Tussen de aansluitklemmen KL 5 "±24 VDC" - KL 6 "±24 VDC" van de VDC-apparaten en behuizingen resp. condensaata-ansluitingen bestaat geen galvanische scheiding.

Bij metingen, bijv. bij aardleidingmetingen volgens VDE 0701-0702 / IEC 85/361/CD, dient u rekening te houden met het feit dat tussen de geleidende delen van het apparaat die aangeraakt kunnen worden en het aardleidingsteunpunt alleen een verbinding is voor het maken van een functieaarding en geen veiligheidsheidsverbinding die stroom kan dragen.

Draai de schroefverbinding van de kabel aan totdat deze lichtjes afdicht.

**Potentiaalvrij contact**

Via het potentiaalvrije contact kan het alarmsignaal worden doorgegeven (bijv. naar een schakelpaneel). Het wisselcontact kan bijv. in de **fail-safe-modus** worden gebruikt:

Als de bedrijfsspanning is ingeschakeld en de ECO-DRAIN storingsvrij werkt, is het alarmrelais aangetrokken. Het werkcontact (7 - 8) is gesloten.

Als de bedrijfsspanning niet is ingeschakeld of als er een storingsmelding volgt, valt het alarmrelais af. Het werkcontact is open (alarm).

**Externe testknop (optioneel)**
Hiermee kan aanwezig condensaat op afstand doelgericht worden afgeleid. De normale testknopfunctie zit in dit geval ook aan de buitenkant. Als het externe contact wordt gesloten, gaat het ventiel open.
Kijk in de extra gebruiksaanwijzing!

**Tussen de aansluiting van de beschermingsgeleider/PE-aansluiting en het buizensysteem mag er geen potentiaal-verschil zijn. Eventueel moet een potentiaalvereffening worden verricht volgens VDE 0100 / IEC 60364.**

Elektrische Installation • Electrical installation
Installation électrique • Elektrische installatie

deutsch

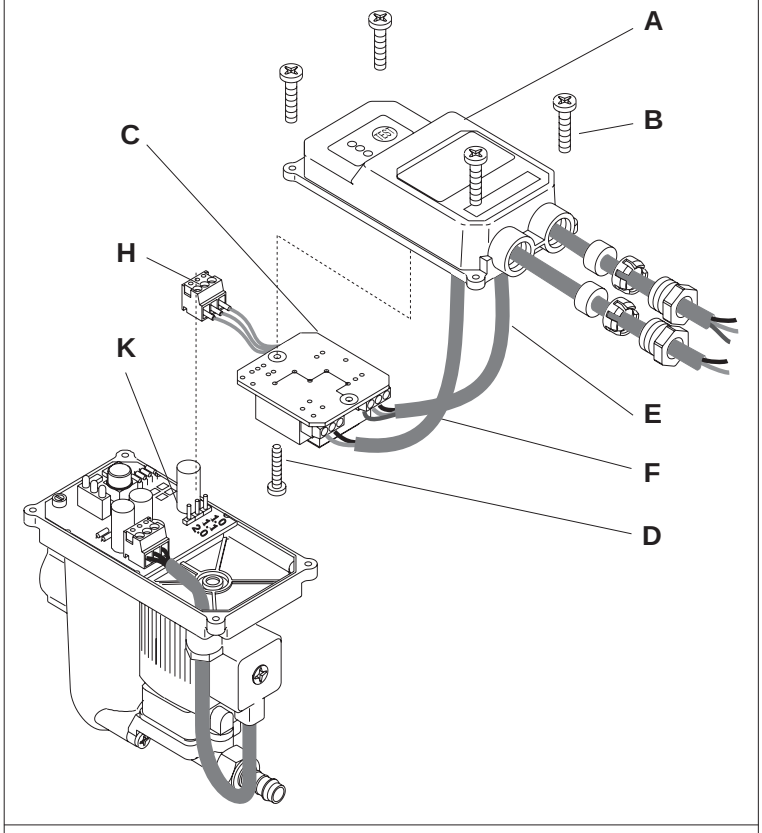


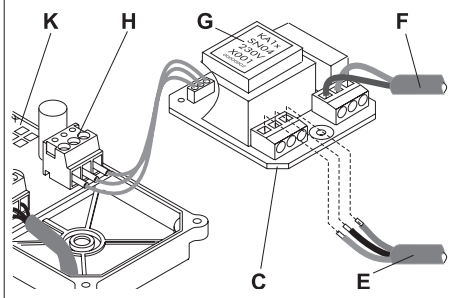


| | | |
|---|---|---|
| 0.8 | | normally open |
| 0.7 | | common |
| 0.6 | | normally closed |
| | | |
| 0.2 | PE | Earth/Ground |
| 0.1 | N | Neutral |
| 0.0 | L | Phase |

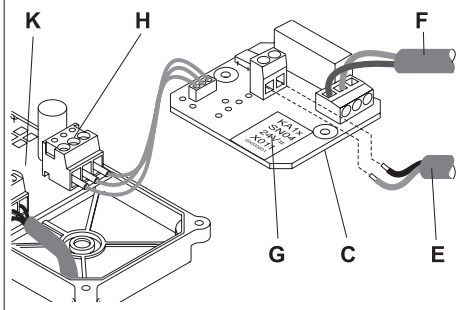


| | | |
|---|---|---|
| 0.8 | | normally open |
| 0.7 | | common |
| 0.6 | | normally closed |
| 6 | ±24V | +24 VDC (0V) |
| 5 | ±24V | 0V (+24 VDC) |
| | | |
| | | |
| | | |

- Zulässige Netzspannung unbedingt auf Typenschild (**G**) ablesen!
- Installationsarbeiten gemäß VDE 0100 / IEC 60364 ausführen.
- Nicht unter Spannung installieren.
- Haubendeckel (**A**) nach Lösen der 4 Schrauben (**B**) demontieren.
- Netzteilplatine (**C**) aus Haubendeckel (**A**) nach Lösen der Schraube (**D**) herausnehmen.
- Kabel für Spannungsversorgung (**E**) und potenzialfreien Kontakt (**F**) durch Kabelverschraubungen führen.
- **Klemmenbelegung**
  VAC Spannungsversorgung
  0.0 L
  0.1 N
  0.2 PE
  24 VDC Spannungsversorgung
  +24 VDC (0V)
  0V (+24 VDC)

  Bei 24 VDC-Betrieb darf nicht Masse auf **+ 24** VDC gelegt werden, da geräteintern Minus auf Gehäusepotential liegt.

  Die bereitgestellte Spannung 24 VDC muss die Anforderungen für Funktionskleinspannungen mit sicherer Trennung (PELV) nach IEC 60364-4-41 erfüllen.
- Potenzialfreien Kontakt (**F**) an Klemmen 0.6 - 0.7 (bei Störung geschlossen) oder 0.7 - 0.8 (bei Störung geöffnet) anschließen.
- Kabel (**E + F**) straffen und Kabelverschraubungen festschrauben
- Netzteilplatine (**C**) im Haubendeckel (**A**) mit Schraube (**D**) befestigen.
- Kabelstecker (**H**) auf Steuerplatine (**K**) aufstecken.
- Falls irrtümlich die Einzellitzen aus dem Kabelstecker geschraubt wurden, gilt folgende Zuordnung: 1.0 = braun
  1.1 = blau
  2.0 = schwarz
- Haubendeckel (**A**) aufsetzen und die 4 Schrauben (**B**) handfest anziehen

**Beachten!**

Netzteilplatine (**C**) sitzt gedreht (über Kopf) im Haubendeckel (**A**).

Im lastfreien Betrieb kann an den Klemmen 1.0 und 1.1 (Kabelstecker (**H**)) eine Spannung von bis zu 36 VDC gemessen werden.

## english

- It is imperative to read the permissible mains voltage from the type plate (G)!
- Carry out installation works in accordance with VDE 0100 / IEC 60364.
- Do not install when voltage is applied.
- Lift off domed cover (**A**) after removing the 4 screws (**B**).
- Take power supply board (**C**) out of the domed cover (**A**) after removing the screw (**D**).
- Guide cables for power supply (**E**) and potential-free contact (**F**) through screwed cable fittings.
- **Terminals**

  VAC power supply 0.0 L
  0.1 N
  0.2 PE

  24 VDC power supply +24 VDC (0V)
  0V (+24 VDC)

  In the case of 24 VDC operation, do not connect **+24 VDC** to frame because the internal housing potential of the device is negative.

  The provided 24 VDC voltage must meet the requirements for protective extra-low voltages (PELV) in accordance with IEC 60364-4-41.
- Connect potential-free contact (**F**) to terminals 0.6 - 0.7 (fail safe) or 0.7 - 0.8 (open during malfunction).
- Pull cable (**E + F**) tight and screw down cable fittings.
- Screw power supply board (**G**) with screw (**D**) into domed cover (**A**)
- Plug ribbon cable (**H**) into control PCB (**K**)
- If the individual wires have not been screwed into the plug, they should be attached as follows: 1.0 = brown
  1.1 = blue
  2.0 = black
- Put on top of cover (**A**) and tighten the 4 screws (**B**)

**Please note:**

The power supply board (**C**) is in a reverse position (upside down) in the domed cover (**A**).

During no-load operation, a voltage of up to 36 VDC may be measured at terminals 1.0 and 1.1 (plug ribbon cable (**H**)).

## français

- Respecter impérativement la tension secteur admissible, mentionnée sur la plaque signalétique (G) !
- Réaliser les travaux d'installation conformément à VDE 0100 / IEC 60364.
- Ne pas effectuer l'installation SOUS TENSION.
- Démonter le capot (**A**), après avoir dévissé les 4 vis (**B**) .
- Retirer la carte d'alimentation (**C**) du capot (**A**), après avoir dévissé la vis (**D**) .
- Enfiler à travers les presse-étoupes, les câbles pour l'alimentation électrique (**E**) et le contact sans potentiel (**F**).
- **Bornes**

  VAC Alimentation électrique 0.0 L
  0.1 N
  0.2 PE

  24 VDC Alimentation électrique
  +24 VDC (0V)
  0V (+24 VDC)

  En cas d'alimentation 24 VDC, la masse ne doit pas être reliée au **+24 VDC** étant donné qu'à l'intérieur de l'appareil le moins est au potentiel du boîtier.

  La tension continue de 24 VDC mise à disposition doit répondre aux exigences pour les Très Basses Tensions de Protection (T.B.T.P.) avec séparation sécurisée par rapport à la tension secteur (PELV = Protection by Extra Low Voltage) selon la norme IEC 60364-4-41.
- Raccorder le contact sans potentiel (**F**) aux bornes 0.6 - 0.7 (fermé en cas de panne) ou 0.7 - 0.8 (ouvert en cas de panne)
- Tendre les câbles (**E + F**) , puis serrer les presse-étoupes
- Revisser la carte d'alimentation (**C**) avec la vis (**D**) dans le capot (**A**)
- Enficher le câble en nappe (connecteur) (**H**) sur la carte de commande (**K**)
- Au cas où les diffèrents fils seraient par inadvertance dissociès de la fiche, respecter la répartition suivante:
  1.0 = marron
  1.1 = bleu
  2.0 = noir
- Mettre le capot (**A**) en place et visser les 4 vis (**B**)

**Important !**

La carte d'alimentation (**C**) est à l'envers dans le capot (**A**) .

A vide, on peut relever aux bornes1.0 et 1.1 (câble en nappe connecteur (**H**)) une tension pouvant atteindre 36 VDC.

## nederlands

- Lees de geoorloofde netspanning altijd af op het typeplaatje (G)!
- Verricht de installatiewerkzaamheden volgens VDE 0100 / IEC 60364.
- Niet installeren onder spanning.
- Bovendeksel (**A**) demonteren door losdraaien van 4 schroeven (**B**) .
- Voedingsprint (**C**) losschroeven en uit de bovendeksel (**A**) halen.
- Voedingskabel (**E**) en kabel voor potentiaalvrij contact (**F**) door wartels en bestemde gaten doorvoeren.
- **Contacten**

  VAC voedingskabel 0.0 L
  0.1 N
  0.2 PE

  24 VDC voedingskabel +24 VDC (0V)
  0V (+24 VDC)

  Bij 24 VDC weking mag massa niet op **+24 VDC** worden gelgd, omdat intern in het apparaat minus op het omhullingspotentieel ligt.

  De opgebrachte spanning 24 VDC moet voldoen aan de eisen voor functionele laagspanning met veilige scheiding (PELV) volgens IEC 60364-4-41.
- Potentiaalvrij contact (**F**) op contacten 0.6 - 0.7 (bij storing gesloten) of 0.7 - 0.8 (bij storing geopend) aansluiten.
- Kabels (**E + F**) aantrekken en wartels vastdraaien.
- Voedingsprint (**C**) vastschroeven in bovendeksel (**A**).
- Flatcable (stekker) (**H**) op besturingsprint (**K**) steken.
- Als de eenstrengkabels per ongeluk uit de kabelstekker zijn geschroefd, geldt de volgende toewijzing: 1.0 = bruin
  1.1 = blauw
  2.0 = zwart
- Bovendeksel (**A**) opzetten en met de 4 schroeven (**B**) vastdraaien.

**Belangrijk!**

De voedingsprint (**C**) zit gedraaid (ondersteboven) in de bovendeksel (**A**).

In onbelaste toestand kan een spanning van 36 VDC worden gemeten op contact 1.0 en 1.1 (flatcable stekker (**H**)).

Kontrolle und Wartung

**Gefahr!**
**Druckluft!**
**Durch Kontakt mit schnell oder schlagartig entweichender Druckluft oder durch berstende und/oder nicht gesicherte Anlagenteile besteht Gefahr schwerer Verletzungen oder Tod.**

**Maßnahmen:**
- Max. Betriebsdruck nicht überschreiten (siehe Typenschild).
- **Wartungsarbeiten nur im drucklosen Zustand durchführen.**
- Nur druckfestes Installationsmaterial verwenden.
- Zulaufleitung fest verrohren. Ablaufleitung: kurzer, fixierter Druckschlauch an druckfestem Rohr.
- Verhindern Sie, dass Personen oder Gegenstände von Kondensat oder entweichender Druckluft getroffen werden können.

**Gefahr!**
**Netzspannung!**
**Durch Kontakt mit Netzspannung führenden nicht isolierten Teilen besteht Gefahr eines elektrischen Schlages mit Verletzung oder Tod.**

**Maßnahmen:**
- Bei elektrischer Installation alle geltenden Vorschriften einhalten (z.B. VDE 0100 / IEC 60364).
- Wartungsarbeiten nur im spannungsfreien Zustand durchführen.
- Alle elektrischen Arbeiten dürfen nur von befugtem Fachpersonal durchgeführt werden.

**Vorsicht!**
**Fehlfunktionen in der Anwendung!**
**Durch fehlerhafte Installation und mangelhafte Wartung kann es zu Fehlfunktionen am ECO-DRAIN kom men. Nicht abgeleitetes Kondensat kann zu Schäden an Anlagen und in Fertigungsprozessen führen.**

**Maßnahmen:**
- Eine funktionssichere Kondensatableitung optimiert direkt die Druckluftqualität.
- Zur Vermeidung von Schäden und Ausfällen bitte unbedingt beachten:
  - genaues Einhalten der bestimmungsgemäßen Verwendung und der Betriebsparameter des ECO-DRAIN im Zusammenhang mit dem Einsatzfall (siehe dazu Kapitel „Bestimmungsgemäße Verwendung“)
  - genaues Einhalten der Installations- und Betriebshinweise in dieser Anleitung
  - regelmäßige Wartung und Kontrolle des ECO-DRAIN nach den Hinweisen in dieser Betriebsanleitung

**Hinweis:**

Beachten Sie unbedingt alle aufgeführten Gefahren- und Warnhinweise.

Beachten Sie auch alle Vorschriften und Hinweise des Arbeits- und Brandschutzes am jeweiligen Installationsort.

Verwenden Sie grundsätzlich nur geeignetes und passendes Werkzeug und Material in ordnungsgemäßem Zustand.

Verwenden Sie keine aggressiven Reinigungsmittel und ungeeignete Geräte, wie Hochdruckreiniger.

Beachten Sie, dass Kondensate aggressive und gesundheitsschädigende Bestandteile enthalten können. Deshalb sollte ein Hautkontakt vermieden werden.

Kondensat ist ein entsorgungspflichtiger Abfall, welcher in geeigneten Behältern aufgefangen, entsorgt oder aufbereitet werden muss.

Supervision and maintenance

**Danger!**
**Compressed air!**
**Risk of serious injury or death through contact with quickly or suddenly escaping compressed air or through bursting plant components or plant components which are not secured.**

**Measures:**

- Do not exceed the maximum operating pressure (see type plate)!
- **Only carry out service measures when the system is pressureless.**
- Use pressure-resistant installation material only.
- The feed pipe must be tubed firmly. Discharge pipe: short, fixed pressure hose onto pressure-resistant pipe.
- Make sure that persons or objects cannot be hit by condensate or escaping compressed air.

**Danger!**
**Supply voltage!**
**There is the risk of an electric shock involving injury or death when coming into contact with non-insulated components carrying supply voltage.**

**Measures:**

- During electric installations, all regulations in force need to be adhered to (e.g. VDE 0100 / IEC 60364).
- Service measures must only be undertaken when the system is deactivated!
- All types of electrical work must be carried out by authorised and qualified personnel only.

**Caution!**
**Malfunctions in the application!**
**Through incorrect installation and insufficient maintenance, the ECO-DRAIN can malfunction. Condensate which is not discharged can lead to damage to plants and in manufacturing processes.**

**Measures:**

- Fail-safe condensate discharge directly optimises the compressed-air quality.
- To prevent damage and failures, it is imperative
  - To comply with the provisions regarding proper use and with the operating parameters of the ECO-DRAIN in connection with the case of application (see chapter "Proper use").
  - To strictly adhere to the installation and operating advice in these instructions.
  - To maintain and check the ECO-DRAIN at regular intervals in accordance with the advice in these operating instructions.

**Note:**

It is imperative to observe all hazard statements and warnings listed here.

Please also observe all regulations and notes regarding the industrial safety and fire prevention at the respective place of installation.

As a matter of principle, only use suitable and appropriate tools and materials in a proper condition.

Do not use aggressive cleaners and improper devices such as high-pressure cleaners.

Please note that condensates may contain aggressive or harmful components. Therefore, skin contact should be avoided.

Condensate is subject to mandatory waste disposal and must be collected in suitable

containers, and disposed of or processed properly.

Contrôle et maintenance

**Danger !**
**Air comprimé !**
**Tout contact avec de l'air comprimé s'échappant rapidement ou de façon brutale ou tout contact avec des parties de l'installation présentant un risque d'éclatement peut causer de graves blessures ou entraîner la mort.**

**Mesures préventives :**

- Ne pas dépasser la pression de service maximale (voir plaque signalétique).
- **Dépressuriser le purgeur avant toute intervention d'entretien ou de maintenance.**
- N'utiliser que du matériel d'installation résistant à la pression.
- La conduite d'amenée doit toujours être réalisée en tuyauterie rigide et fixe. Conduite d'évacuation : flexible de faible longueur, fixé et relié à une tuyauterie, tous deux résistant à la pression.
- Veillez à ce qu'aucune personne ni objet ne risque d'être touché par le condensat ou l'air comprimé qui s'échappe.

**Danger !**
**Tension électrique !**
**Tout contact avec des éléments non isolés et sous tension présente un risque de choc électrique pouvant provoquer des blessures ou entraîner la mort.**

**Mesures préventives :**

- Lors de la réalisation de l'installation électrique, respecter toutes les prescriptions en vigueur (p. ex. VDE 0100 / IEC 60364).
- Avant toute intervention d'entretien ou de maintenance, mettre le purgeur HORS TENSION.
- Toute intervention électrique doit être réalisée exclusivement par un personnel qualifié et habilité.

**Prudence !**
**Dysfonctionnements au niveau de l'utilisation !**
**En cas d'installation incorrecte et de maintenance insuffisante, des dysfonctionnements peuvent apparaître au niveau du ECO-DRAIN.**
**Tout condensat non évacué risque d'endommager les installations et de porter atteinte aux processus de fabrication.**

**Mesures préventives :**

- Le bon fonctionnement de la purge des condensats permet une optimisation directe de la qualité de l'air comprimé.
- Pour éviter tout endommagement et tout arrêt de production, il est impératif de respecter les consignes suivantes :
  - Respecter scrupuleusement les instructions pour une utilisation conforme à l'usage prévu et les paramètres de fonctionnement du ECO-DRAIN dans le contexte de son utilisation (consulter à cet effet le chapitre „Utilisation conforme à l'usage prévu“).
  - Respecter scrupuleusement toutes les instructions d'installation et d'utilisation communiquées dans cette notice.
  - Respecter scrupuleusement la périodicité de maintenance et de contrôle du ECO-DRAIN selon les indications de ce manuel d'utilisation.

**Remarque :**

Respectez impérativement toutes les informations relatives à un danger ou à un avertissement.

Respectez également toutes les prescriptions et consignes de sécurité relatives à la protection des travailleurs et à la protection incendie en vigueur au lieu d'installation en question.

Utilisez toujours l'outillage et le matériel appropriés et en bon état.

N'utilisez aucun produit de nettoyage agressif, ni d'appareils inadaptés, par exemple les nettoyeurs haute pression.

Notez bien que les condensats peuvent contenir des composants agressifs et néfastes pour la santé. C'est pourquoi, il est recommandé d'éviter tout contact avec la peau.

Les condensats sont soumis à la réglementation sur les déchets. Ils doivent être collectés dans des récipients appropriés, éliminés ou recyclés.

Controle en onderhoud

**Gevaar!**
**Perslucht!**
**Contact met perslucht die snel of abrupt ontsnapt of wegspringende en/of niet beveiligde delen van de installatie leveren gevaar op met zwaar letsel of dood tot gevolg.**

**Maatregelen:**

- Overschrijd de maximale bedrijfsdruk niet (zie instructieplaat).
- **Verricht onderhoudswerkzaamheden uitsluitend in drukloze toestand.**
- Gebruik uitsluitend drukbestendig installatiemateriaal.
- Verbind de toevoerleiding vast met het buizensysteem. Afvoerleiding: bevestig een korte hogedrukslang aan de drukbestendige buis.
- Voorkom dat personen of voorwerpen geraakt kunnen komen door condensaat of ontsnappende perslucht.

**Gevaar!**
**Netspanning!**
**Contact met niet-geïsoleerde delen die de netspanning voeren, levert gevaar op door elektrische schok met letsel en dood tot gevolg.**

**Maatregelen:**

- Volg bij elektrische installatie alle geldende voorschriften op (bijv. VDE 0100 / IEC 60364).
- Verricht onderhoudswerkzaamheden uitsluitend in spanningsvrije toestand.
- Alle elektrische werkzaamheden mogen uitsluitend worden uitgevoerd door bevoegd vakpersoneel.

**Let op!**
**Storingen tijdens het gebruik!**
**Er kunnen storingen aan de ECO-DRAIN ontstaan als gevolg van een foutieve installatie en gebrekkig onderhoud.**
**Niet afgevoerd condensaat kan schade veroorzaken aan installaties en in productieprocessen.**

**Maatregelen:**

- Een veilig functionerende condensaatafvoer optimaliseert direct de persluchtkwaliteit.
- Neem het volgende absoluut in acht om schade en uitval te voorkomen:
  - Correct opvolgen van de instructies voor doelmatig gebruik en van de bedrijfsparameters van de ECO-DRAIN afhankelijk van de gebruikssituatie (zie hiervoor hoofdstuk "Doelmatig gebruik")
  - Correct opvolgen van de installatie- en bedrijfsinstructies in deze handleiding
  - Regelmatig onderhoud en controle van de ECO-DRAIN volgens de instructies in deze gebruiksaanwijzing

**Hinweis:**

Neem alle opgesomde gevaar- en waarschuwingsinstructies absoluut in acht.

Neem ook alle voorschriften en instructies in acht in verband met de arbeidsomstandigheden en brandveiligheid op de respectievelijke installatieplek.

Gebruik in principe alleen maar geschikt en passend gereedschap en materiaal dat in goede staat is.

Gebruik geen aggressieve reinigingsmiddelen en ongeschikte apparaten zoals hogedrukreinigers.

Let op! Condensaat kan agressieve bestanddelen bevatten die schadelijk kunnen zijn voor de gezondheid. Daarom moet contact met de huid worden vermeden.

Condensaat is afval dat verwijderd moet worden en in geschikte containers moet worden opgevangen, verwijderd of behandeld.

| Wartung • Maintenance • Entretien • Onderhout | deutsch |
|---|---|
| 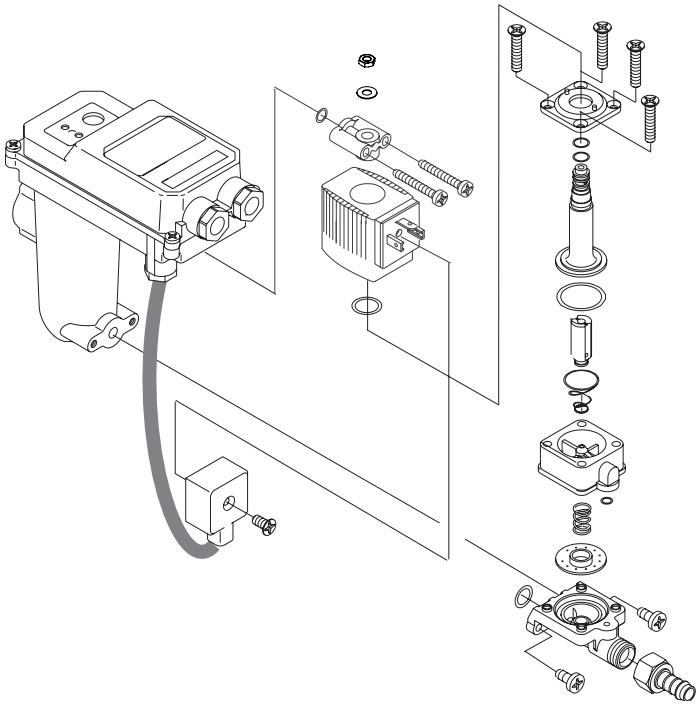 | Empfehlung zur Wartung:<br>• Jährlich Gehäuse und Ventil reinigen<br>• Jährlich Verschleißteile ersetzen |
| 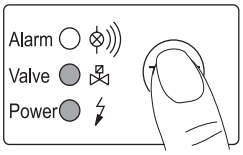 | Funktionstest des ECO-DRAIN:<br>• Test-Taster ca. 2 sek. betätigen.<br>• Ventil öffnet zur Kondensatableitung<br><br>Überprüfung der Störmeldung:<br>• Kondensatzulauf absperren<br>• Test-Taster mind. 1 Minute betätigen<br>• rote LED blinkt (nach 1 Minute)<br>• Alarmsignal wird durchgeschaltet |

| english | français | nederlands |
|---|---|---|
| Maintenance recommendation:<br>• Housing and valve should be cleaned once a year.<br>• Replace wearing parts once a year. | Recommandations pour l'entretien :<br>• 1 fois par an, nettoyer le boîtier et la soupape<br>• 1 fois par an, remplacer les pièces d'usure | Advies voor onderhoud:<br>• Jaarlijks behuizing en ventiel reinigen<br>• Jaarlijks preventief onderhoud plegen |
| Functional test of ECO-DRAIN device:<br>• Briefly press test button 2 sec.<br>• Valve opens for condensate discharge.<br><br>Checking of alarm signal:<br>• Shut off condensate inflow.<br>• Press test button for at least 1 minute.<br>• Red LED flashes (after 1 minute).<br>• Alarm signal is being relayed. | Test de fonctionnement du ECO-DRAIN<br>• Pression brève sur la touche Test 2 s<br>• La soupape s'ouvre pour la purge<br><br>Vérification du signal d'alarme :<br>• Obturer l'arrivée de condensat<br>• Presser la touche Test pendant 1 minute au moins<br>• La LED rouge clignote (après 1 minute)<br>• Le signal d'alarme est activé | Functietest van de ECO-DRAIN:<br>• Testschakelaar 2 seconden indrukken<br>• Ventiel opent voor kondensaatafvoer<br><br>Controle van (externe) storingsmelder:<br>• Kondensaattoevoer afsluiten<br>• Testschakelaar 1 minuut indrukken<br>• Rode LED knippert (na 1 minuut)<br>• Alarmsignaal wordt doorgeschakeld |

| Fehlersuche • Trouble shooting<br>Recherche de panne • Storingsoorzaken | | deutsch |
|---|---|---|
| 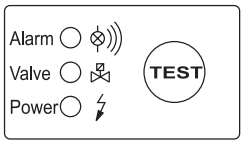 | keine LED leuchtet<br><br>No LED lighting up<br><br>Aucune LED n'est allumée<br><br>Geen enkele LED brandt | Mögliche Ursachen:<br>• Spannungsversorgung fehlerhaft<br>• Netzteilplatine defekt<br>• Steuerplatine defekt<br><br>- Spannung auf Typenschild ablesen<br>- Spannung auf Netzteilplatine an Klemmen 0.0 - 0.1 - 0.2 prüfen.<br>- 24 VDC-Spannung auf Steuerplatine an Klemmen 1.0 - 1.1 prüfen (ohne Last bis 36 VDC messbar)<br>- Steckerverbindung/Flachbandkabel prüfen |
| 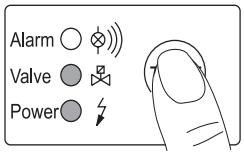 | Test-Taster ist betätigt, aber keine Kondensatableitung<br><br>Pressing of test button, but no condensate discharge<br><br>La touche Test est actionnée, mais sans purge du condensat<br><br>De testknop is ingedrukt, maar er is geen kondensaatafvoer | Mögliche Ursachen:<br>• Zu- und/oder Ablaufleitung abgesperrt oder verstopft<br>• Verschleiß<br>• Steuerplatine defekt<br>• Magnetventil defekt<br><br>- Zu- und Ablaufleitung kontrollieren<br>- Verschleißteile austauschen<br>- Prüfen, ob Ventil hörbar öffnet (Test-Taster mehrmals betätigen)<br>- 24 VDC-Spannung auf Steuerplatine an Klemmen 3.0 - 3.1 - 3.2 prüfen (ohne Last bis 36 VDC messbar) |
| 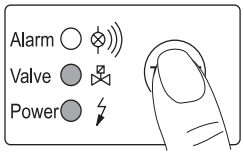 | Kondensatableitung nur wenn Test-Taster betätigt ist<br><br>Condensate discharge only when test button is being pressed<br><br>Purge du condensat uniquement si la touche Test est actionnée<br><br>Kondensaat wordt alleen afgevoerd als de testknop is ingedrukt | Mögliche Ursachen:<br>• Zulaufleitung ohne ausreichendes Gefälle<br>• zu hoher Kondensatanfall<br>• Fühlerrohr sehr stark verschmutzt<br>• Mindestdruck unterschritten<br><br>- Zulaufleitung mit Gefälle verlegen<br>- Luftausgleichsleitung installieren<br>- Fühlerrohr reinigen<br>- Mindestdruck sicherstellen oder Low Pressure- oder Vakuumableiter installieren |
| 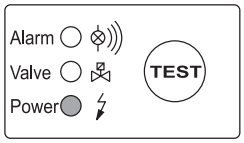 | Gerät bläst permanent ab<br><br>Device keeps blowing off air<br><br>L'appareil refoule de l'air en permanence<br><br>De ECO-DRAIN blaast continue af | Mögliche Ursachen:<br>• Steuerluftleitung verstopft<br>• Verschleiß<br><br>- Ventileinheit komplett reinigen<br>- Verschleißteile austauschen<br>- Fühlerrohr reinigen |

| english | français | nederlands |
|---|---|---|
| Possible causes:<br>• Power supply faulty<br>• Power supply board defective<br>• Control PCB defective<br><br>- Check voltage on type plate.<br>- Check voltage on power supply board at terminals 0.0 - 0.1 - 0.2.<br>- Check 24 VDC voltage on control PCB at terminals 1.0 - 1.1 (without load up to 36 VDC may be measured)<br>- Check plug connection/ribbon cable | Origines possibles :<br>• Défaut d'alimentation électrique<br>• Carte d'alimentation défectueuse<br>• Carte de commande défectueuse<br><br>- Relever la tension sur la plaque<br>- Vérifier la tension sur la carte d'alimentation, aux bornes 0.0 - 0.1 - 0.2.<br>- Vérifier la tension de 24 VDC sur la carte de commande, aux bornes 1.0 - 1.1 (mesurable sans charge jusqu'à 36 VDC)<br>- Vérifier liaison enfichable/câble en nappe | Mogelijke oorzaken:<br>• Spanning onjuist aangesloten<br>• Voedingsprint defect<br>• Besturingsprint defect<br><br>- Spanning op typeplaatje aflezen<br>- Spanning op voedingsprint op contact 0.0 - 0.1 - 0.2 controleren.<br>- 24 VDC-spanning op de besturingsprint op contact 1.0 - 1.1 controleren (onbelast tot 36 VDC mogelijk)<br>- Stekkerverbinding/flatcable controleren |
| Possible causes:<br>• Feed and/or outlet line shut off or blocked<br>• Wear<br>• Control PCB defective<br>• Solenoid valve defective<br><br>- Check feed line and outlet line<br>- Replace worn parts<br>- Check if valve opens audibly (press test button several times)<br>- Check 24 VDC voltage on control PCB at terminals 3.0 - 3.1 - 3.2 (without load up to 36 VDC may be measured) | Origines possibles :<br>• Conduites d'arrivée et/ou d'évacuation obturées ou bouchées<br>• Usure<br>• Carte de commande défectueuse<br>• Electrovanne défectueuse<br><br>- Contrôler l'arrivée et l'évacuation<br>- Remplacer les pièces d'usure<br>- Vérifier si l'ouverture de la soupape est perceptible (Presser plusieurs fois la touche Test)<br>- Vérifier les 24 VDC sur la carte de commande, aux bornes 3.0 - 3.1 - 3.2. (mesurable sans charge jusqu'à 36 VDC) | Mogelijke oorzaken:<br>• Toe- en/of afvoerleiding afgesloten of verstopt<br>• Onderdelen aan vervanging toe<br>• Besturingsprint defect<br>• Magneetventiel defect<br><br>- Toe- en afvoerleiding controleren<br>- Onderdelen vervangen<br>- Testen, of het ventiel hoorbaar opent (testknop meerdere malen indrukken)<br>- 24 VDC-spanning op besturingsprint op contact 3.0 - 3.1 - 3.2 controleren. (onbelast tot 36 VDC mogelijk) |
| Possible causes:<br>• Feed line with insufficient slope<br>• Excessive condensate quantities<br>• Sensor tube extremely dirty<br>• Dropping below necessary minimum pressure<br><br>- Lay feed line with adequate slope<br>- Install venting line<br>- Clean sensor tube<br>- Ensure minimum pressure, otherwise install low-pressure or vacuum condensate drain | Origines possibles :<br>• Conduite d'arrivée avec pente insuffisante<br>• Trop de condensat produit<br>• Tube de sonde fortement encrassé<br>• Pression minimale non atteinte<br><br>- Réaliser l'arrivée avec une pente<br>- Installer une conduite d'équilibrage d'air<br>- Nettoyer le tube de sonde<br>- Assurer la pression minimale ou installer un purgeur Low Pressure ou à dépression | Mogelijke oorzaken:<br>• Toevoerleiding heeft onvoldoende verval<br>• Te grote hoeveelheid kondensaat<br>• Voeler zeer sterk vervuild<br>• Minimale werkdruk te laag<br><br>- Toevoerleiding onder afschot monteren<br>- Ontluchtingsleiding installeren<br>- Voeler reinigen<br>- Voldoen aan de minimale werkdruk of een lagedruk- of vacuüm-ECO-DRAIN installeren. |
| Possible causes:<br>• Control air line blocked<br>• Wear<br><br>- Clean entire valve unit<br>- Replace worn parts<br>- Clean sensor tube | Origines possibles :<br>• Conduite d'équilibrage d'air bouchée<br>• Usure<br><br>- Nettoyer entièrement le module soupape<br>- Remplacer les pièces d'usure<br>- Nettoyer le tube sonde | Mogelijke oorzaken:<br>• Stuurluchtleiding verstopt<br>• Onderdelen aan vervanging toe<br><br>- Ventieleenheid compleet reinigen<br>- Onderdelen vervangen<br>- Voeler reinigen |

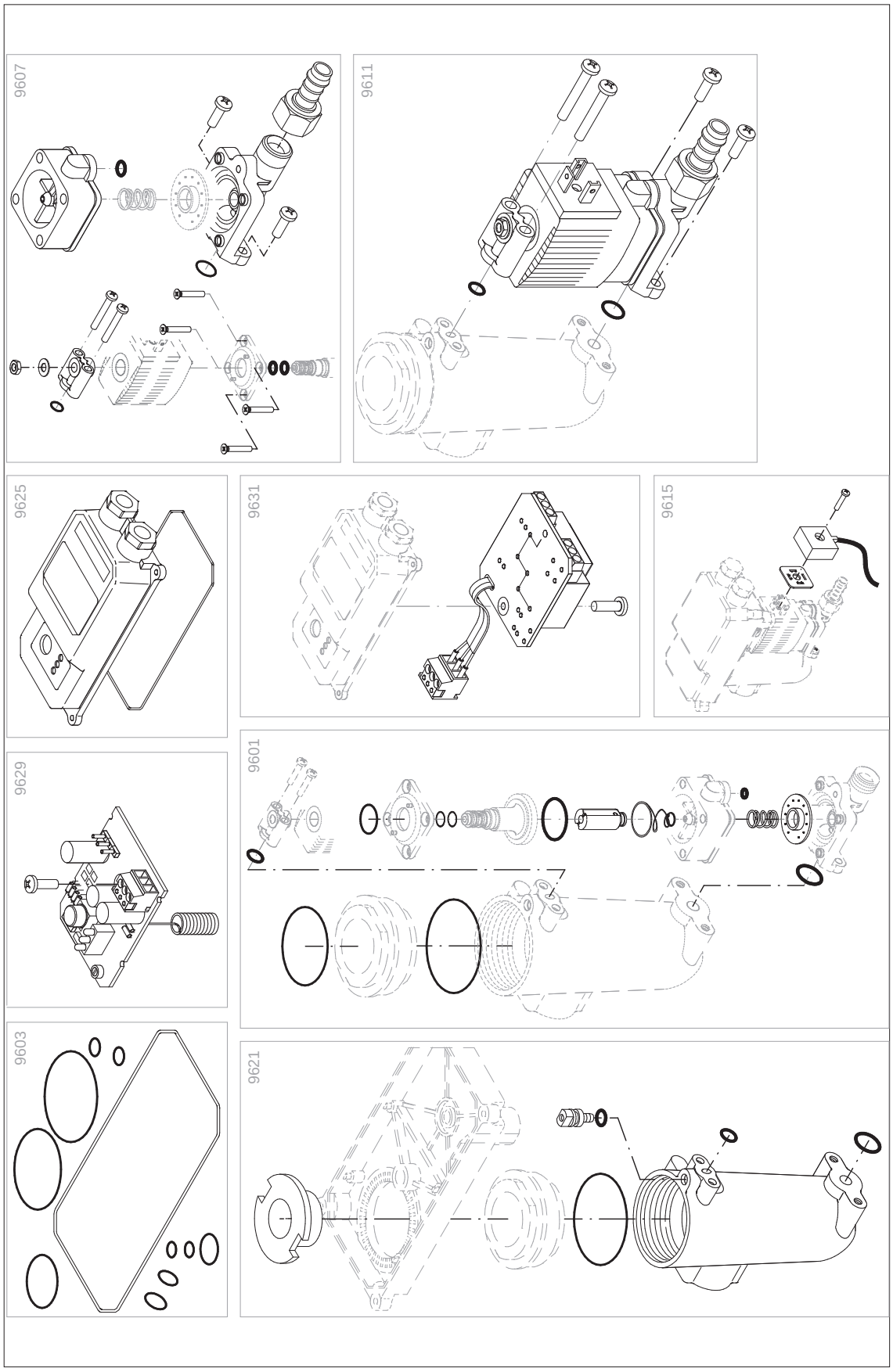
9607
9611
9625
9631
9615
9629
9601
9603
9621

deutsch

| | Legende | KAESER KOMPRESSOREN |
|---|---|---|
| | **Kondensatableiter** | SEL-4330_01 D |

| Pos. Nr. | Benennung | Option |
|---|---|---|
| 9601 | Wartungssatz Kondensatabl. | |
| 9603 | Dichtungssatz | |
| 9607 | Reparatursatz Steuerventil | |
| 9611 | Reparatursatz Kondensatableit. | |
| 9615 | Winkelstecker | |
| 9601 | Gehäuse | |
| 9623 | Gehäusedeckel | |
| 9625 | Schutzhaube | |
| 9629 | Steuerplatine | |
| 9631 | Netzteil Kondensatableiter | |
| | | |

Bitte geben Sie bei der Ersatzteilbestellung Material- und Serialnummer der Anlage sowie Positionsnummer und Bezeichnung der Ersatzteile an.

Vor und bei Ausführung aller Arbeiten sind die Sicherheits- und Servicehinweise in der Betriebsanleitung der Maschine zu beachten!

english

| | Legend | KAESER KOMPRESSOREN |
|---|---|---|
| | **Condensate drain** | SEL-4330_01 E |

| Item | Description | Option |
|---|---|---|
| 9601 | Maintenance kit, condensate drain | |
| 9603 | Condensate drain gasket kit | |
| 9607 | Repair kit, control valve | |
| 9611 | Repair kit, condensate drain | |
| 9615 | Right-angle glug | |
| 9601 | Housing | |
| 9623 | Housing cover | |
| 9625 | Protection hood | |
| 9629 | Control board | |
| 9631 | Condensate drain mains adapter | |
| | | |

Please quote the part number and serial number of the machine together with the item number and the description of the part when ordering.

Before and during all work, be sure to read and follow the safety and service instructions in the machine´s service manual!

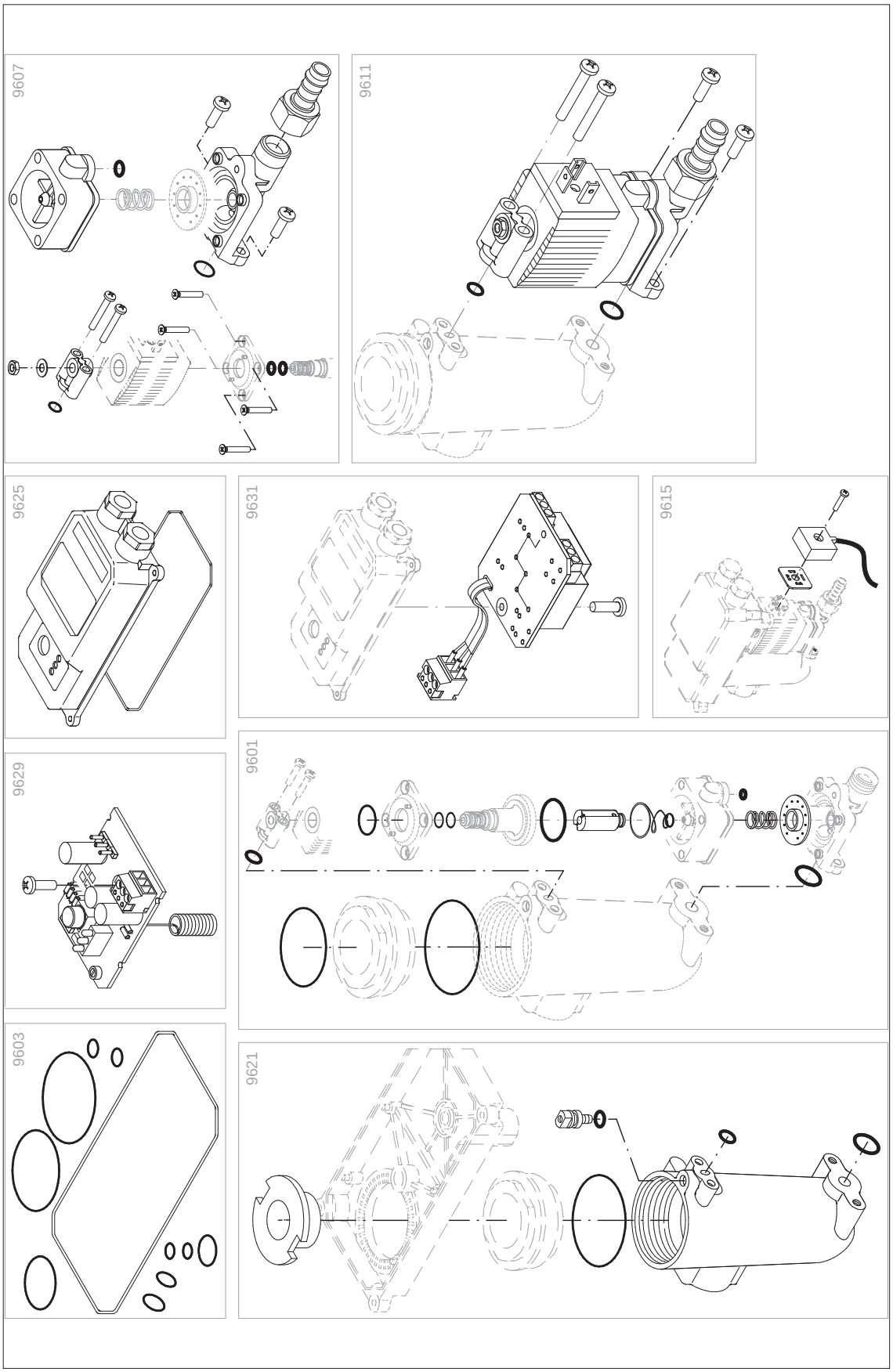
9607
9611
9625
9631
9615
9629
9601
9603
9621

français

| | Légende | KAESER KOMPRESSOREN |
|---|---|---|
| | **Purgeur de condensat** | SEL-4330_01 F |

| No. Repère | Désignation | Option |
|---|---|---|
| 9601 | Kit entretien Purg. condensat | |
| 9603 | Kit de joints Purg. condensat | |
| 9607 | Kit réparation Vanne de régul. | |
| 9611 | Kit révision Purg. condensat | |
| 9615 | Fiche coudée | |
| 9601 | Boîtier | |
| 9623 | Couvercle de boîtier | |
| 9625 | Capot de protection | |
| 9629 | Platine de réglage | |
| 9631 | Bloc d´alim. Purg. de condens. | |
| | | |

Indiquersur chaque commande de piéces de rechange la référence et le No. de série de l´appareil, de même que le No. de repère et la désignation de la pièce de rechange.

Avant et pendant l´exécution des travaux, lire et observer impérativement les consignes de sécurité et de maintenance données dans la notice d´entretien de la machine!

nederlands

| | Legende | KAESER KOMPRESSOREN |
|---|---|---|
| | **Condensaataftap** | SEL-4330_01 NL |

| Pos.nr. | Benaming | Option |
|---|---|---|
| 9601 | Onderhoudsset condensaataftap | |
| 9603 | Dichtingsset condensaataftap | |
| 9607 | Reparatieset stuurventiel | |
| 9611 | Revisieset condensaataftap | |
| 9615 | Haakse stekker | |
| 9601 | Huis | |
| 9623 | Huisdeksel | |
| 9625 | Beschermkap | |
| 9629 | Sturingsprintplaat | |
| 9631 | Voedingseenheid condens.-aftap | |
| | | |

Geef vor het bestellen van onderdelen artikel- en serienummer van de machine evenals nummer en benaming van het onderdeel op.

Voor en tijdens het uitvoeren van werkzaamheden moeten alle veiligheids- en serviceinstructies in het bedrijfsvoorschrift nageleeft worden!

**BEKO** TECHNOLOGIES GMBH
Im Taubental 7
41468 Neuss

GERMANY

Tel: +49 2131 988-0
www.beko-technologies.com

# EU-Konformitätserklärung

Wir erklären hiermit, dass die nachfolgend bezeichneten Produkte den Anforderungen der einschlägigen Richtlinien und technischen Normen entsprechen. Diese Erklärung bezieht sich nur auf die Produkte in dem Zustand, in dem sie von uns in Verkehr gebracht wurden. Nicht vom Hersteller angebrachte Teile und/oder nachträglich vorgenommene Eingriffe bleiben unberücksichtigt.

| | |
|---|---|
| Produktbezeichnung: | Kondensatableiter |
| Modelle: | ECO-DRAIN 12, 12 CO, 12 CO PN63,<br>13, 13 CO, 13 CO PN 25, 13 CO PN 40,<br>14, 14 CO, 14 CO PN25, 16 CO<br>Die Produkte werden hergestellt für:<br>KAESER KOMPRESSOREN SE<br>Carl-Kaeser-Str. 26<br>96450 Coburg |
| Spannungsvarianten: | 24 VDC, 24 VAC, 48 VAC, 100 VAC, 115 VAC, 200 VAC,<br>230 VAC |
| Max. Betriebsdruck: | 16 bar(g) (Standard)<br>25 bar(g) (nur ECODRAIN 13 CO PN25 und ECODRAIN 14 CO PN25)<br>40 bar(g) (nur ECODRAIN 13 CO PN40)<br>63 bar(g) (nur ECODRAIN 12 PN63) |
| Produktbeschreibung und Funktion: | Kondensatableiter zur elektronisch niveaugeregelten Ableitung von Kondensat im Druckluftnetz. |

**Niederspannungs-Richtlinie 2014/35/EU**

| | |
|---|---|
| Angewandte harmonisierte Normen: | EN 61010-1:2010<br>Kapitel 1-14, 16, 17, Anhang A-D, F, G, I-L, ZA |

Die Geräte mit einer Betriebsspannung von 24 VDC, 24 VAC und 48 VAC fallen nicht in den Anwendungsbereich der Niederspannungs-Richtlinie.

**EMV-Richtlinie 2014/30/EU**

| | |
|---|---|
| Angewandte harmonisierte Normen: | Störaussendung<br>EN 55011:2009 + A1:2010, Gruppe 1, Klasse B<br>Störfestigkeit<br>EN 61326-1:2013 (Industriebereich) |

**Druckgeräte-Richtlinie 2014/68/EU (nur ECO-DRAIN 16 CO)**

| | |
|---|---|
| Angewandtes Konformitätsbewertungsverfahren: | Modul A |

**ROHS II-Richtlinie 2011/65/EU**

Die Vorschriften der Richtlinie 2011/65/EU zur Beschränkung der Verwendung bestimmter gefährlicher Stoffe in Elektro- und Elektronikgeräten werden erfüllt.

Der Hersteller trägt die alleinige Verantwortung für die Ausstellung dieser Konformitätserklärung.

Unterzeichnet für und im Namen von:

Neuss, 24.01.2018

**BEKO** TECHNOLOGIES GMBH

i.V.

i.V. Christian Riedel
Leiter Qualitätsmanagement International

**BEKO** TECHNOLOGIES GMBH
Im Taubental 7
41468 Neuss

GERMANY

Phone: +49 2131 988-0
www.beko-technologies.com

# EU Declaration of Conformity

We hereby declare that the products named below comply with the stipulations of the relevant directives and technical standards. This declaration only refers to products in the condition in which they have been placed into circulation. Parts which have not been installed by the manufacturer and/or modifications which have been implemented subsequently remain unconsidered.

| | |
|---|---|
| Product designation: | Condensate drain |
| Type: | ECO-DRAIN 12, 12 CO, 12 CO PN63,<br>13, 13 CO, 13 CO PN 25, 13 CO PN 40,<br>14, 14 CO, 14 CO PN25, 16 CO<br>The products are manufactured for:<br>KAESER KOMPRESSOREN SE<br>Carl-Kaeser-Str. 26<br>96450 Coburg |
| Supply voltage versions: | 24 VDC, 24 VAC, 48 VAC, 100 VAC, 115 VAC, 200 VAC,<br>230 VAC |
| Maximum operating pressure: | 16 bar(g) (Standard)<br>25 bar(g) (only ECODRAIN 13 CO PN25 and ECODRAIN 14 CO PN25)<br>40 bar(g) (only ECODRAIN 13 CO PN40)<br>63 bar(g) (only ECODRAIN 12 PN63) |
| Product description and function: | Condensate drain for the electronically level-controlled discharge of condensate in the compressed-air system. |

**Low Voltage Directive 2014/35/EU**

| | |
|---|---|
| Applied harmonised standards: | EN 61010-1:2010<br>Kapitel 1-14, 16, 17, Appendix A-D, F, G, I-L, ZA |

The devices with working voltage of 24 VDC, 24 VAC and 48 VAC are not in the scope of the Low-Voltage Directive.

**EMC Directive 2014/30/EU**

| | |
|---|---|
| Applied harmonised standards: | Emission<br>EN 55011:2009 + A1:2010, Group 1, class B<br>Immunity<br>EN 61326-1:2013 (industrial areas) |

**Pressure Equipment Directive 2014/68/EU (only ECO-DRAIN 16 CO)**

| | |
|---|---|
| Applied conformity assessment procedure: | Module A |
| Category: | I |
| Description of the pressure device: | Container device for fluids of Group 2 |

**RoHS II Directive 2011/65/EU**

The products meet the requirements laid down in European Directive 2011/65/EU concerning the restriction of the use of certain hazardous substances in electrical and electronic devices.

The manufacturer shall have sole responsibility for issuing this declaration of conformity.

Signed for and on behalf of:

Neuss, **24/01/2018**

**BEKO** TECHNOLOGIES GMBH

KAESER KOMPRESSOREN SE
Carl-Kaeser-Str. 26
D - 96450 Coburg
Tel.: +49 (0)9561 640 0
Fax: +49 (0)9561 640 130
Mail: info@kaeser.com
Web: www.kaeser.com

Technische Änderungen und Irrtümer vorbehalten.
Subject to technical changes without prior notice; errors not excluded.
Sous réserve de modifications techniques et d'erreurs typographiques.
Technische veranderingen en vergissingen voorbehouden.
eco-drain_12_manual_d-e-f-nl_01-046_v02